Title	J17 MAIN
Size A3	Document Number <Doc>
Rev	P0
Date:	Tuesday, August 25, 2020
Sheet	1 of 74

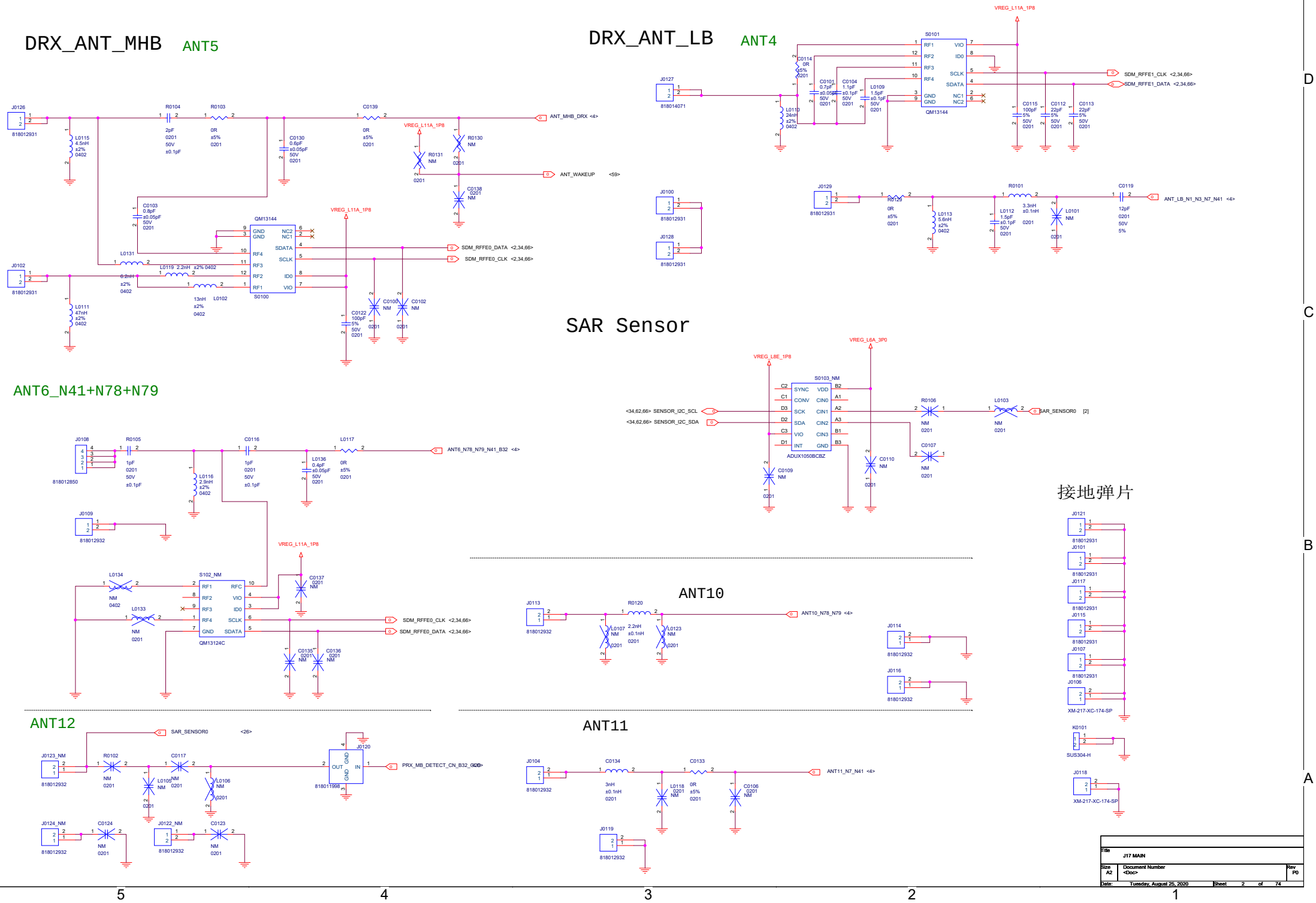
DRX_ANT_MHB
ANT5
DRX_ANT_LB
ANT4
SAR Sensor
ANT6_N41+N78+N79
接地弹片
ANT10
ANT12
ANT11
ANT_MHB_DRX <4>
ANT_WAKEUP <59>
SDM_RFFE0_DATA <2,34,66>
SDM_RFFE0_CLK <2,34,66>
SDM_RFFE1_CLK <2,34,66>
SDM_RFFE1_DATA <2,34,66>
ANT_LB_N1_N3_N7_N41 <4>
SENSOR_I2C_SCL
SENSOR_I2C_SDA
SAR_SENSOR0
ANT6_N78_N79_N41_B32 <4>
ANT10_N78_N79 <4>
ANT11_N7_N41 <4>
PRX_MB_DETECT_CN_B32
VREG_L11A_1P8
VREG_L8E_1P8
VREG_L6A_3P0
QM13144
QM13124C
ADUX1050BCBZ
XM-217-XC-174-SP
SUS304-H
Title
J17 MAIN
Size
A2
Document Number
<Doc>
Rev
P0
Date:
Tuesday, August 25, 2020
Sheet
2
of
74

Title	J17 MAIN
Size A3	Document Number <Doc>
Rev	P0
Date:	Tuesday, August 25, 2020
Sheet	3 74

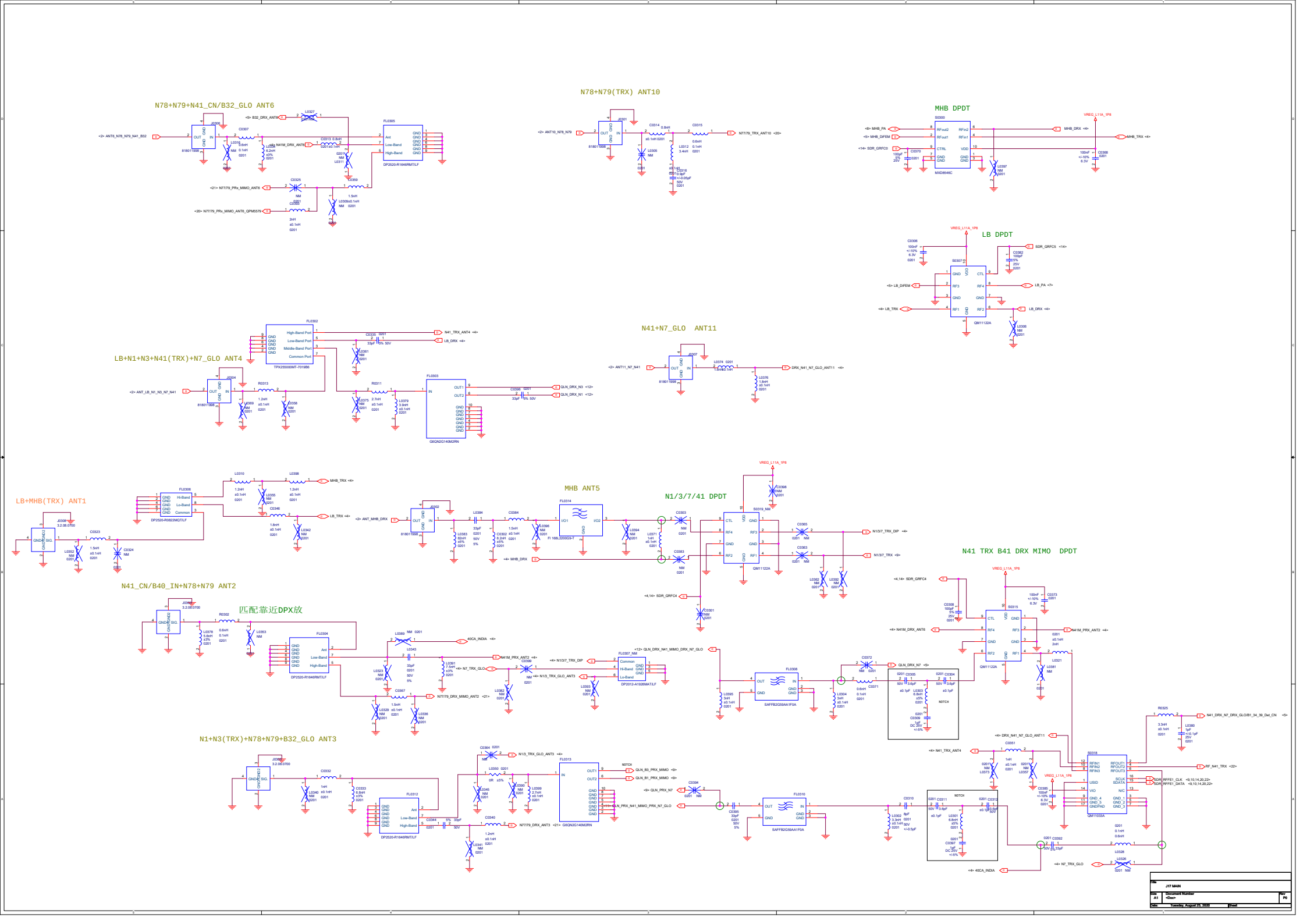
N78+N79+N41_CN/B32_GLO ANT6
N78+N79(TRX) ANT10
MHB DPDT
LB DPDT
LB+N1+N3+N41(TRX)+N7_GLO ANT4
N41+N7_GLO ANT11
LB+MHB(TRX) ANT1
MHB ANT5
N1/3/7/41 DPDT
N41 TRX B41 DRX MIMO DPDT
N41_CN/B40_IN+N78+N79 ANT2
匹配靠近DPX放
N1+N3(TRX)+N78+N79+B32_GLO ANT3
J17 MAIN
A1
Tuesday, August 25, 2020

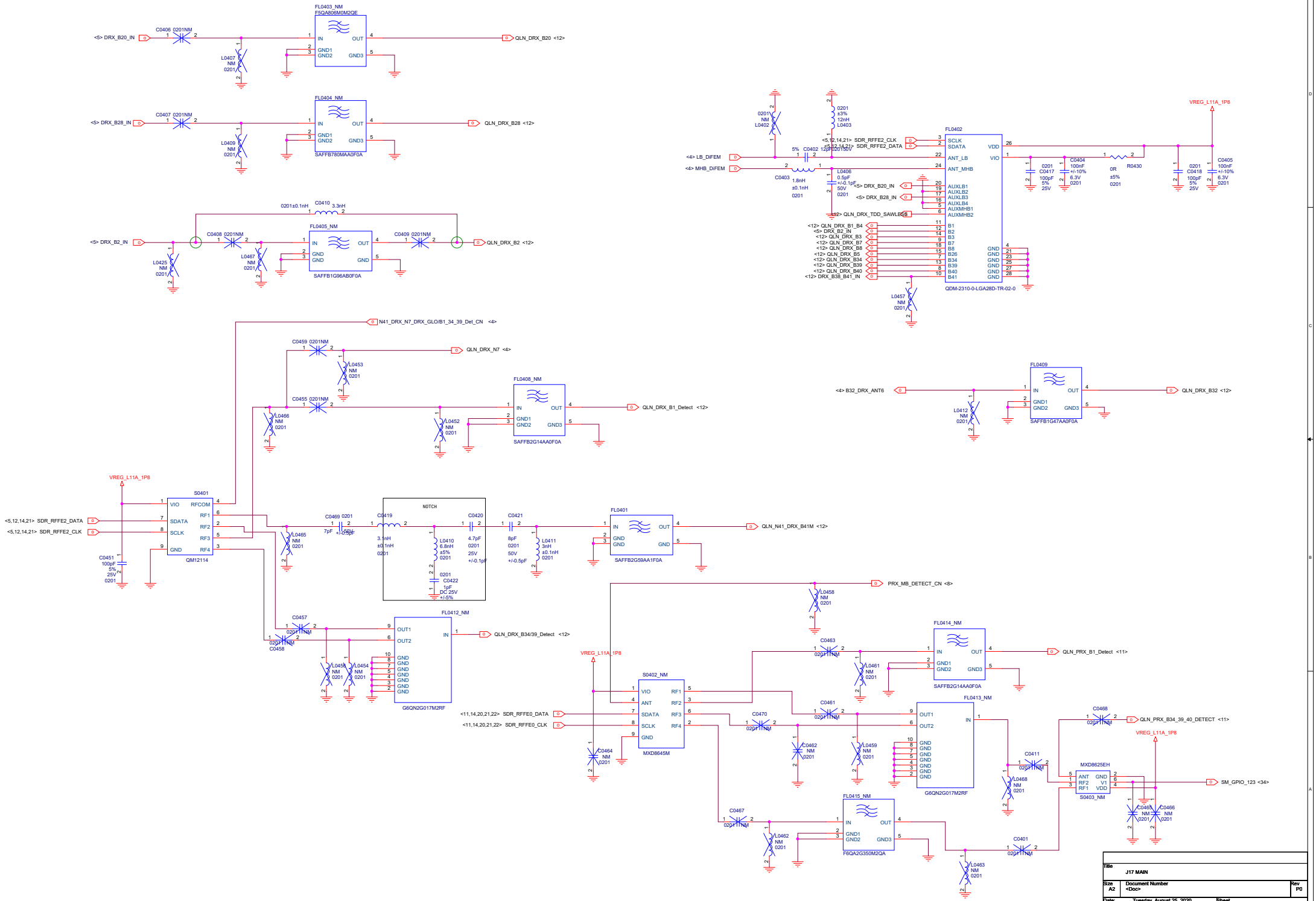
FL0403_NM
F5QA806M0M2QE
<5> DRX_B20_IN
C0406 0201NM
L0407 NM 0201
QLN_DRX_B20 <12>
FL0404_NM
<5> DRX_B28_IN
C0407 0201NM
L0409 NM 0201
SAFFB780MAA0F0A
QLN_DRX_B28 <12>
FL0402
VREG_L11A_1P8
<4> LB_DIFEM
<4> MHB_DIFEM
<5,12,14,21> SDR_RFFE2_CLK
<5,12,14,21> SDR_RFFE2_DATA
C0402 12pF 0201 50V
L0402 0201 NM
L0403 0201 ±3% 12nH
C0403 1.8nH ±0.1nH 0201
L0406 0.5pF +/-0.1pF 50V 0201
<5> DRX_B20_IN
<5> DRX_B28_IN
<12> QLN_DRX_TDD_SAWLESS
<12> QLN_DRX_B1_B4
<5> DRX_B2_IN
<12> QLN_DRX_B3
<12> QLN_DRX_B7
<12> QLN_DRX_B8
<12> QLN_DRX_B5
<12> QLN_DRX_B34
<12> QLN_DRX_B39
<12> QLN_DRX_B40
<12> DRX_B38_B41_IN
L0457 NM 0201
QDM-2310-0-LGA28D-TR-02-0
C0417 100pF +/-10% 6.3V 0201
C0404 100pF +/-10% 6.3V 0201
R0430 0R ±5% 0201
C0418 100pF 5% 25V 0201
C0405 100nF +/-10% 6.3V 0201
FL0405_NM
<5> DRX_B2_IN
C0410 3.3nH 0201±0.1nH
C0408 0201NM
C0409 0201NM
L0425 NM 0201
L0467 NM 0201
SAFFB1G96AB0F0A
QLN_DRX_B2 <12>
N41_DRX_N7_DRX_GLO/B1_34_39_Det_CN <4>
C0459 0201NM
L0453 NM 0201
QLN_DRX_N7 <4>
FL0408_NM
C0455 0201NM
L0466 NM 0201
L0452 NM 0201
SAFFB2G14AA0F0A
QLN_DRX_B1_Detect <12>
FL0409
<4> B32_DRX_ANT6
L0412 NM 0201
SAFFB1G47AA0F0A
QLN_DRX_B32 <12>
VREG_L11A_1P8
S0401
<5,12,14,21> SDR_RFFE2_DATA
<5,12,14,21> SDR_RFFE2_CLK
VIO RFCOM RF1 SDATA RF2 SCLK RF3 GND RF4
QM12114
C0451 100pF 5% 25V 0201
C0469 0201 7pF +/-0.5pF 50V
L0465 NM 0201
NOTCH
C0419 3.1nH ±0.1nH 0201
L0410 6.8nH ±5% 0201
C0420 4.7pF 0201 25V +/-0.1pF
C0422 1pF 0201 DC 25V +/-5%
C0421 8pF 0201 50V +/-0.5pF
L0411 3nH ±0.1nH 0201
FL0401
SAFFB2G59AA1F0A
QLN_N41_DRX_B41M <12>
PRX_MB_DETECT_CN <8>
L0458 NM 0201
C0457 0201NM
C0458 0201NM
FL0412_NM
QLN_DRX_B34/39_Detect <12>
L0456 NM 0201
L0454 NM 0201
G6QN2G017M2RF
FL0414_NM
C0463 0201NM
L0461 NM 0201
QLN_PRX_B1_Detect <11>
SAFFB2G14AA0F0A
S0402_NM
<11,14,20,21,22> SDR_RFFE0_DATA
<11,14,20,21,22> SDR_RFFE0_CLK
VIO ANT SDATA SCLK GND RF1 RF2 RF3 RF4
MXD8645M
C0464 NM 0201
C0470 0201NM
C0461 0201NM
C0462 NM 0201
L0459 NM 0201
FL0413_NM
G6QN2G017M2RF
C0468 0201NM
QLN_PRX_B34_39_40_DETECT <11>
C0411 0201NM
L0468 NM 0201
MXD8625EH
S0403_NM
SM_GPIO_123 <34>
C0465 NM 0201
C0466 NM 0201
C0467 0201NM
L0462 NM 0201
FL0415_NM
F6QA2G350M2QA
C0401 0201NM
L0463 NM 0201
Title
J17 MAIN
Size A2
Document Number <Doc>
Rev P0
Date: Tuesday, August 25, 2020
Sheet

Title	J17 MAIN
Size A3	Document Number <Doc>
Rev	P0
Date:	Tuesday, August 25, 2020
Sheet	6 74

LB S-PAD

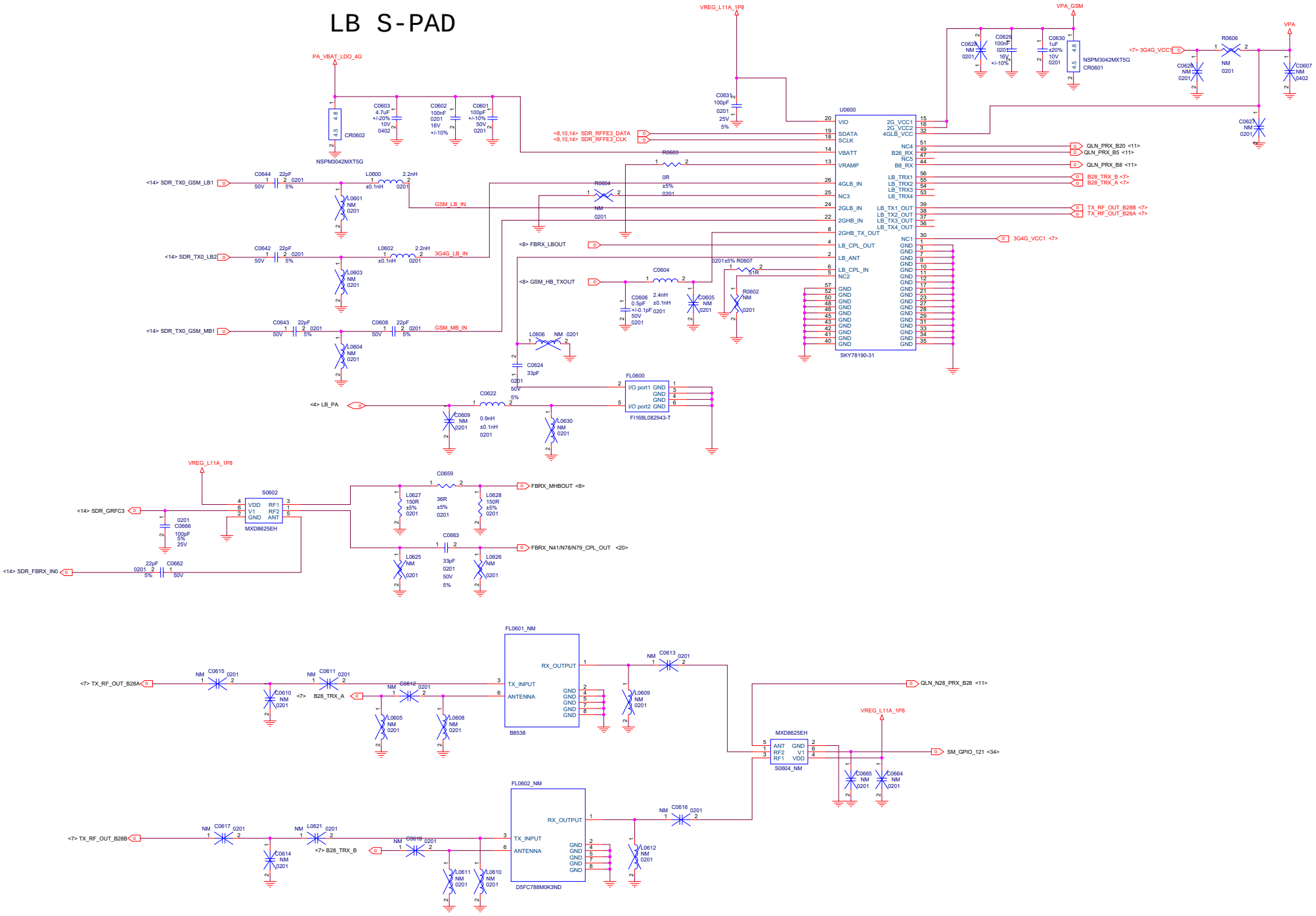

Title	J17 MAIN	
Size A2	Document Number PA1	Rev P0
Date: Tuesday, August 25, 2020	Sheet	

MHB S-PAD

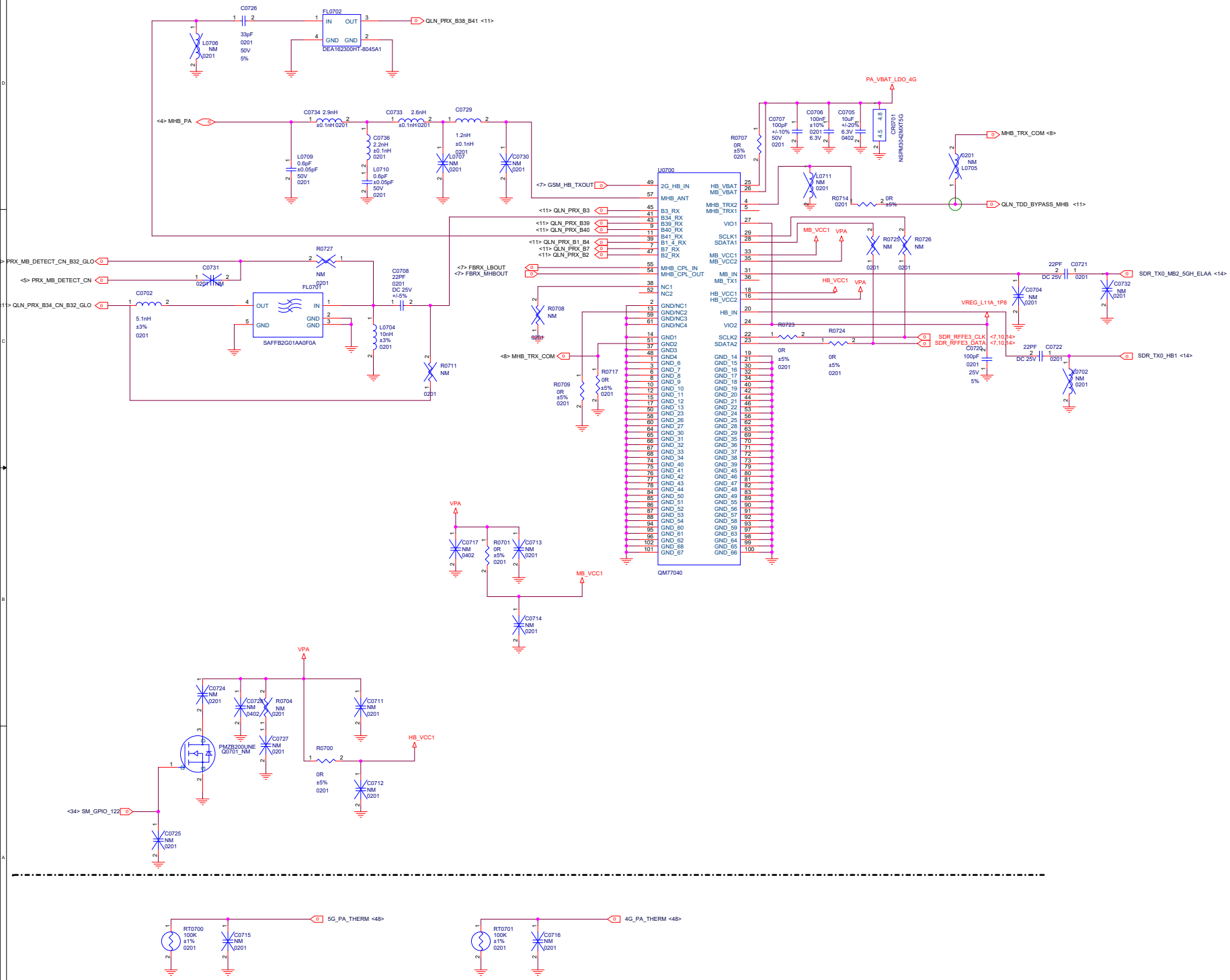

Title	J17 MAIN	
Size A2	Document Number PA2	Rev P0
Date: Tuesday, August 25, 2020	Sheet	

5G FDD PA

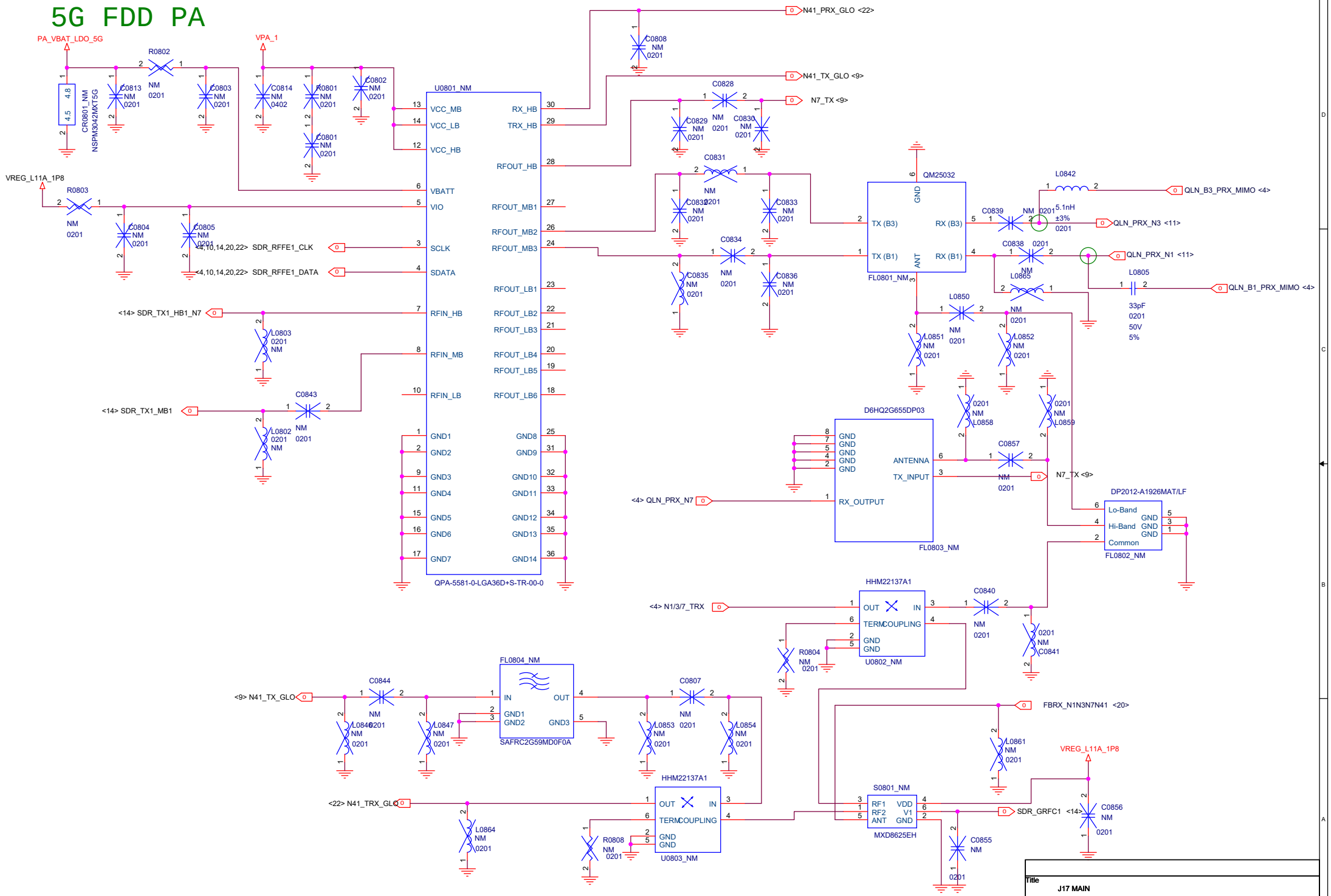
PA_VBAT_LDO_5G
VPA_1
VREG_L11A_1P8
R0802
R0803
CR0801_NM
NSPM3042MXT5G
U0801_NM
QPA-5581-0-LGA36D+S-TR-00-0
VCC_MB
VCC_LB
VCC_HB
VBATT
VIO
SCLK
SDATA
RFIN_HB
RFIN_MB
RFIN_LB
RX_HB
TRX_HB
RFOUT_HB
RFOUT_MB1
RFOUT_MB2
RFOUT_MB3
RFOUT_LB1
RFOUT_LB2
RFOUT_LB3
RFOUT_LB4
RFOUT_LB5
RFOUT_LB6
GND1
GND2
GND3
GND4
GND5
GND6
GND7
GND8
GND9
GND10
GND11
GND12
GND13
GND14
<4,10,14,20,22> SDR_RFFE1_CLK
<4,10,14,20,22> SDR_RFFE1_DATA
<14> SDR_TX1_HB1_N7
<14> SDR_TX1_MB1
N41_PRX_GLO <22>
N41_TX_GLO <9>
N7_TX <9>
QM25032
FL0801_NM
TX (B3)
TX (B1)
RX (B3)
RX (B1)
ANT
GND
QLN_B3_PRX_MIMO <4>
QLN_PRX_N3 <11>
QLN_PRX_N1 <11>
QLN_B1_PRX_MIMO <4>
5.1nH ±3% 0201
33pF 0201 50V 5%
D6HQ2G655DP03
ANTENNA
TX_INPUT
RX_OUTPUT
FL0803_NM
<4> QLN_PRX_N7
DP2012-A1926MAT/LF
Lo-Band
Hi-Band
Common
FL0802_NM
HHM22137A1
OUT
IN
TERM
COUPLING
U0802_NM
<4> N1/3/7_TRX
FL0804_NM
SAFRC2G59MD0F0A
<9> N41_TX_GLO
FBRX_N1N3N7N41 <20>
<22> N41_TRX_GLO
U0803_NM
S0801_NM
RF1
RF2
ANT
VDD
V1
MXD8625EH
SDR_GRFC1 <14>
Title
J17 MAIN
Size A3
Document Number Reserved(for PA)
Rev P0
Date: Tuesday, August 25, 2020
Sheet 9 74

5G QET

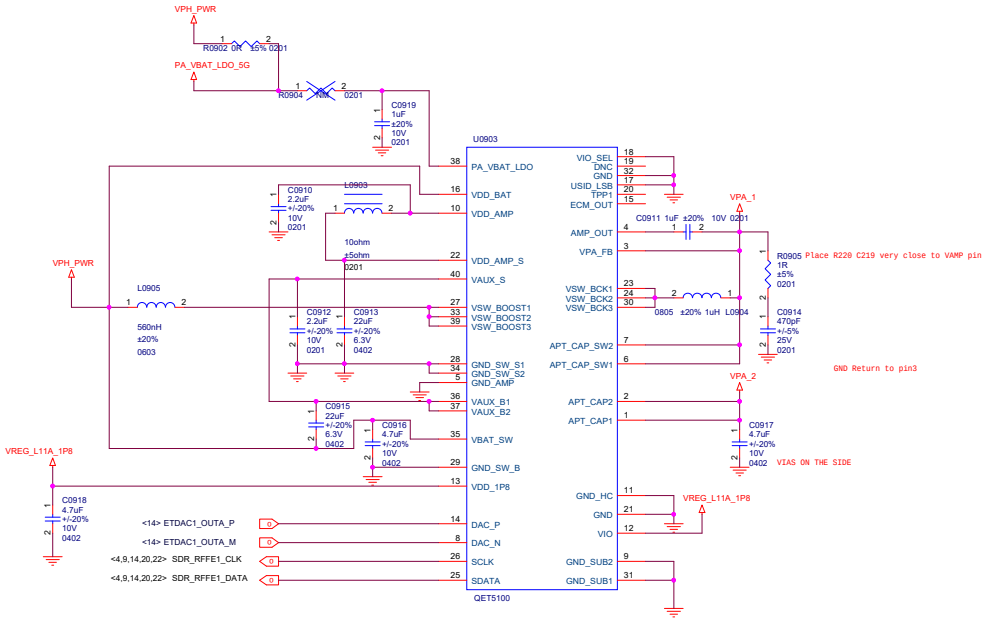

4G QET

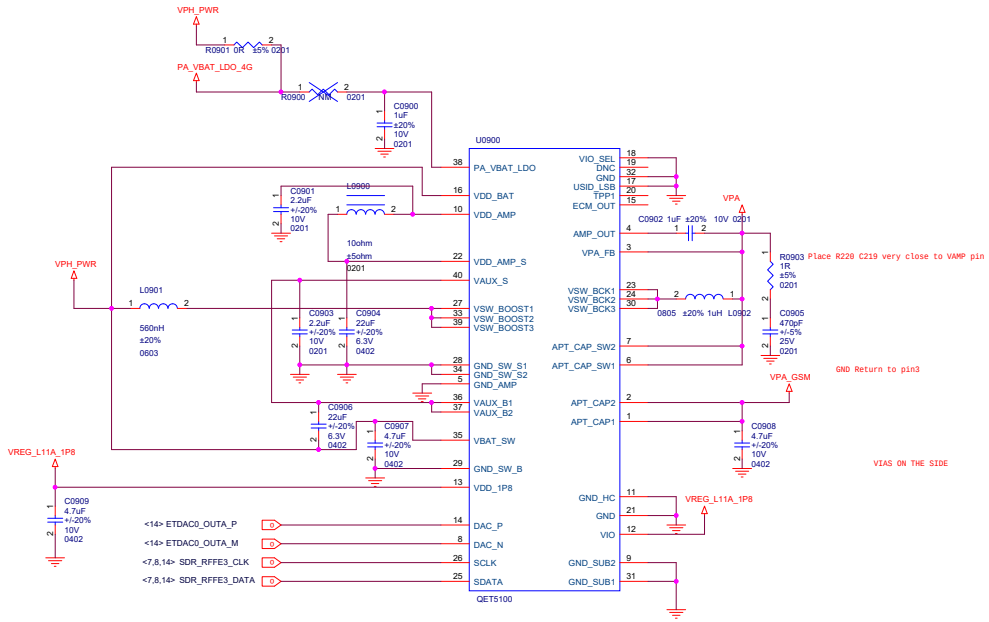

Title	J17 MAIN	
Size A2	Document Number RF DC-DC	Rev P0
Date: Tuesday, August 25, 2020	Sheet	

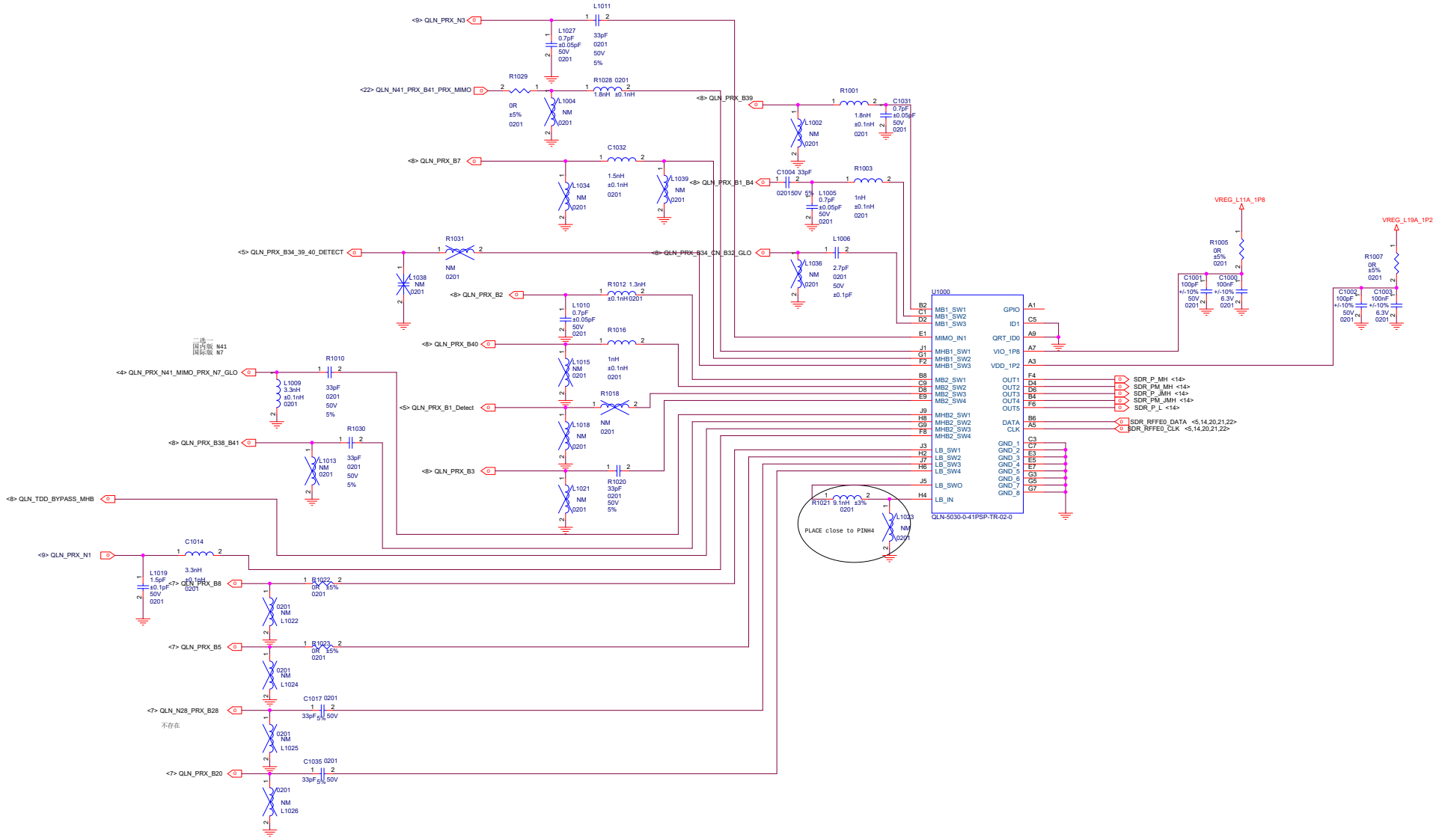

Title	J17 MAIN	
Size A2	Document Number QLN PRX	Rev
Date: Tuesday, August 25, 2020	Sheet	

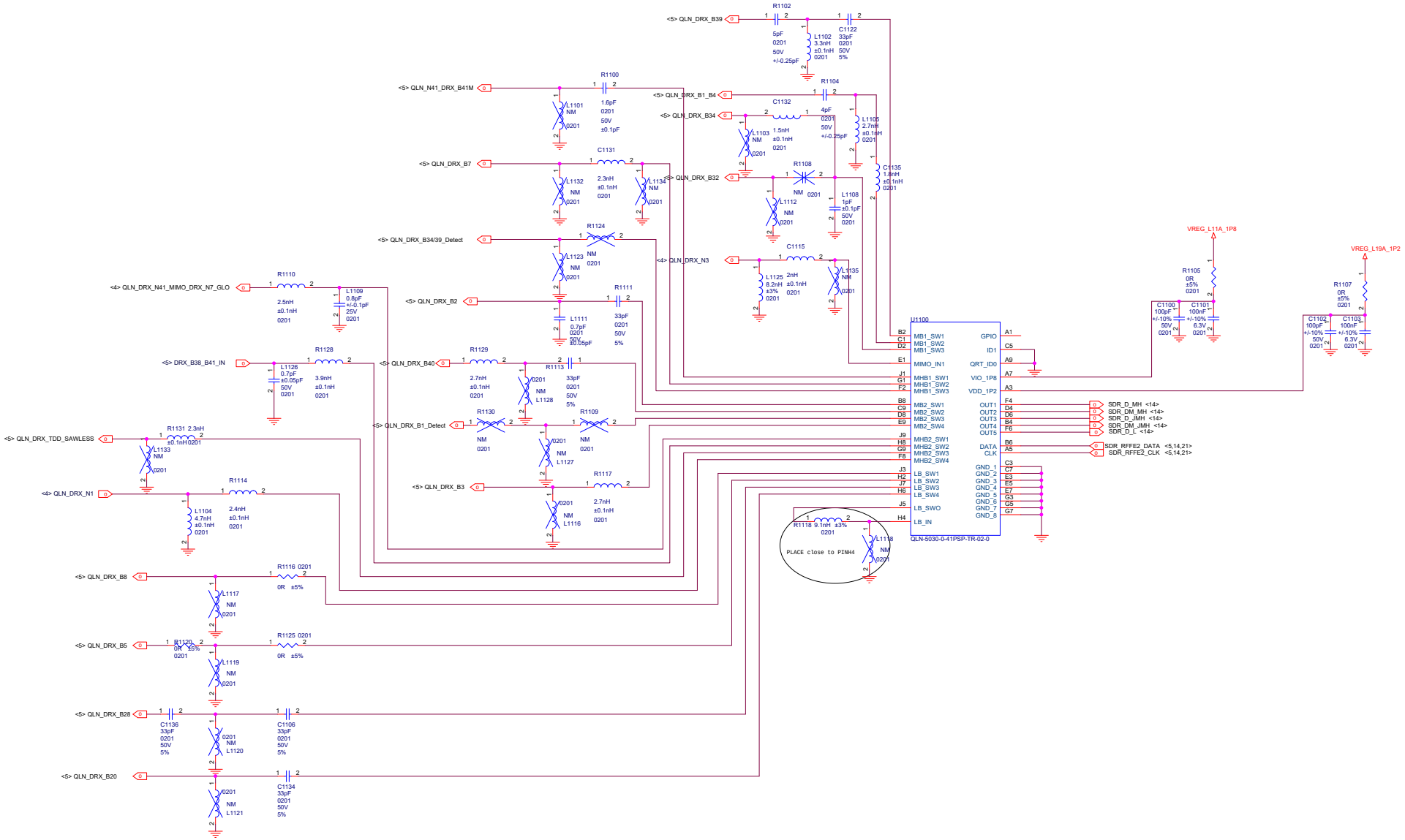

Title	J17 MAIN
Size A2	Document Number QLN DRX
Rev	P0
Date:	Tuesday, August 25, 2020
Sheet	

Title	J17 MAIN
Size A3	Document Number Reserved(for LNA)
Rev	P0
Date:	Tuesday, August 25, 2020
Sheet	13 74

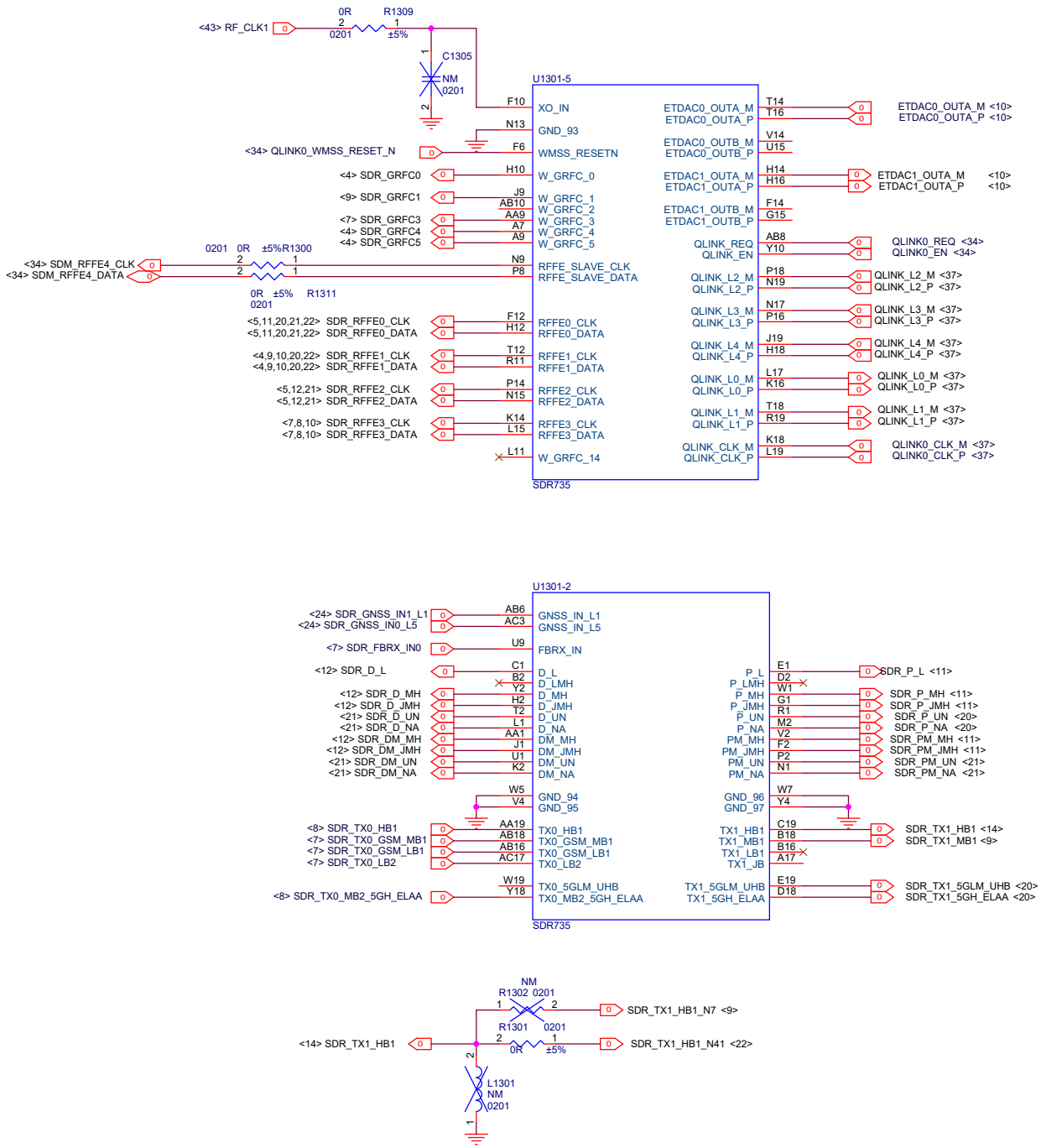

Title	J17 MAIN	
Size A3	Document Number WTR Interface	Rev P0
Date: Tuesday, August 25, 2020	Sheet 14	74

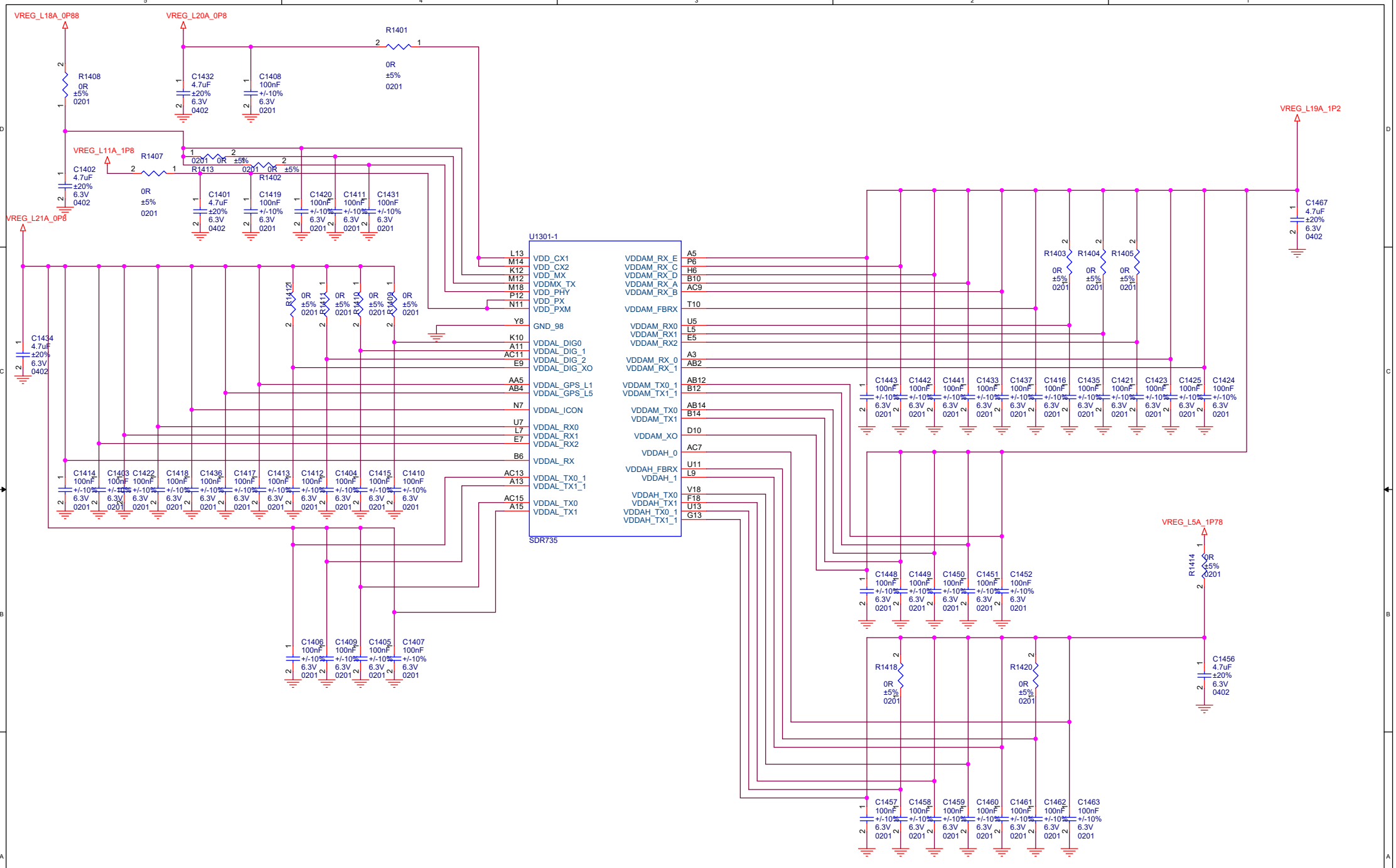

Title	J17 MAIN	
Size A3	Document Number WTR PWR	Rev P0
Date: Tuesday, August 25, 2020	Sheet 15	74

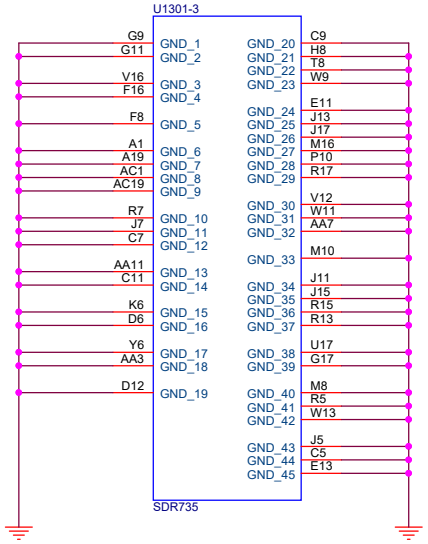

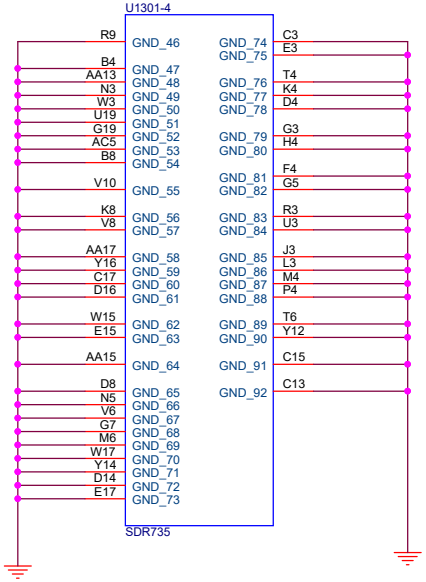

Title	J17 MAIN	
Size A3	Document Number Reserved(for WTR)	Rev P0
Date: Tuesday, August 25, 2020	Sheet 16	74

Title	J17 MAIN
Size A2	Document Number Reserved(for 5G-sub 6G)
Rev	P0
Date:	Tuesday, August 25, 2020
Sheet	

Title	J17 MAIN
Size A2	Document Number Reserved(for MM Wave) Rev P0
Date: Tuesday, August 25, 2020	Sheet

Title	J17 MAIN
Size A2	Document Number Reserved(for 5G-WTR I)
Rev	P0
Date:	Tuesday, August 25, 2020
Sheet	

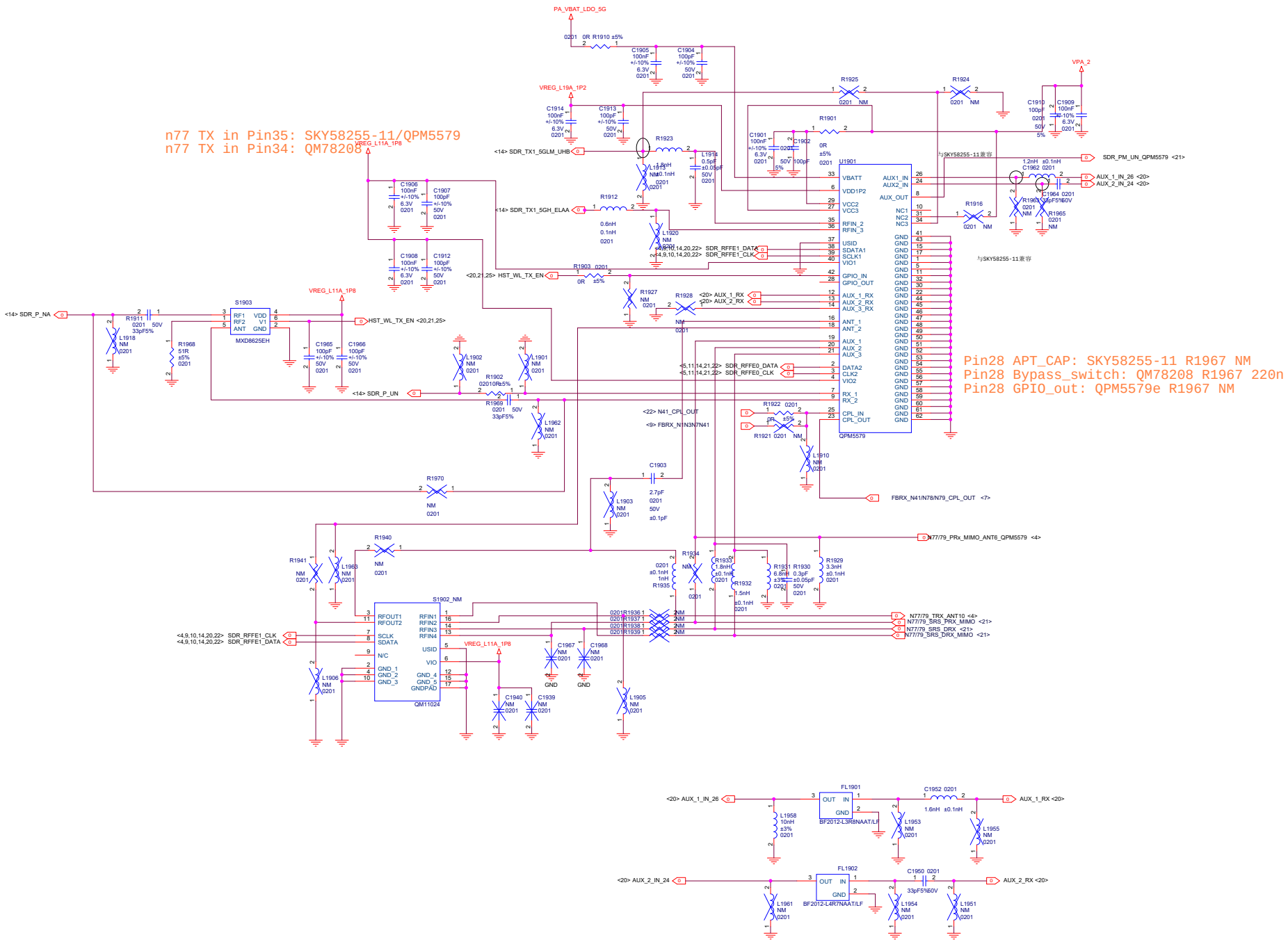

Title	J17 MAIN
Size A2	Document Number Reserved(for 5G-WTR P)
Rev	P0
Date: Wednesday, August 26, 2020	Sheet

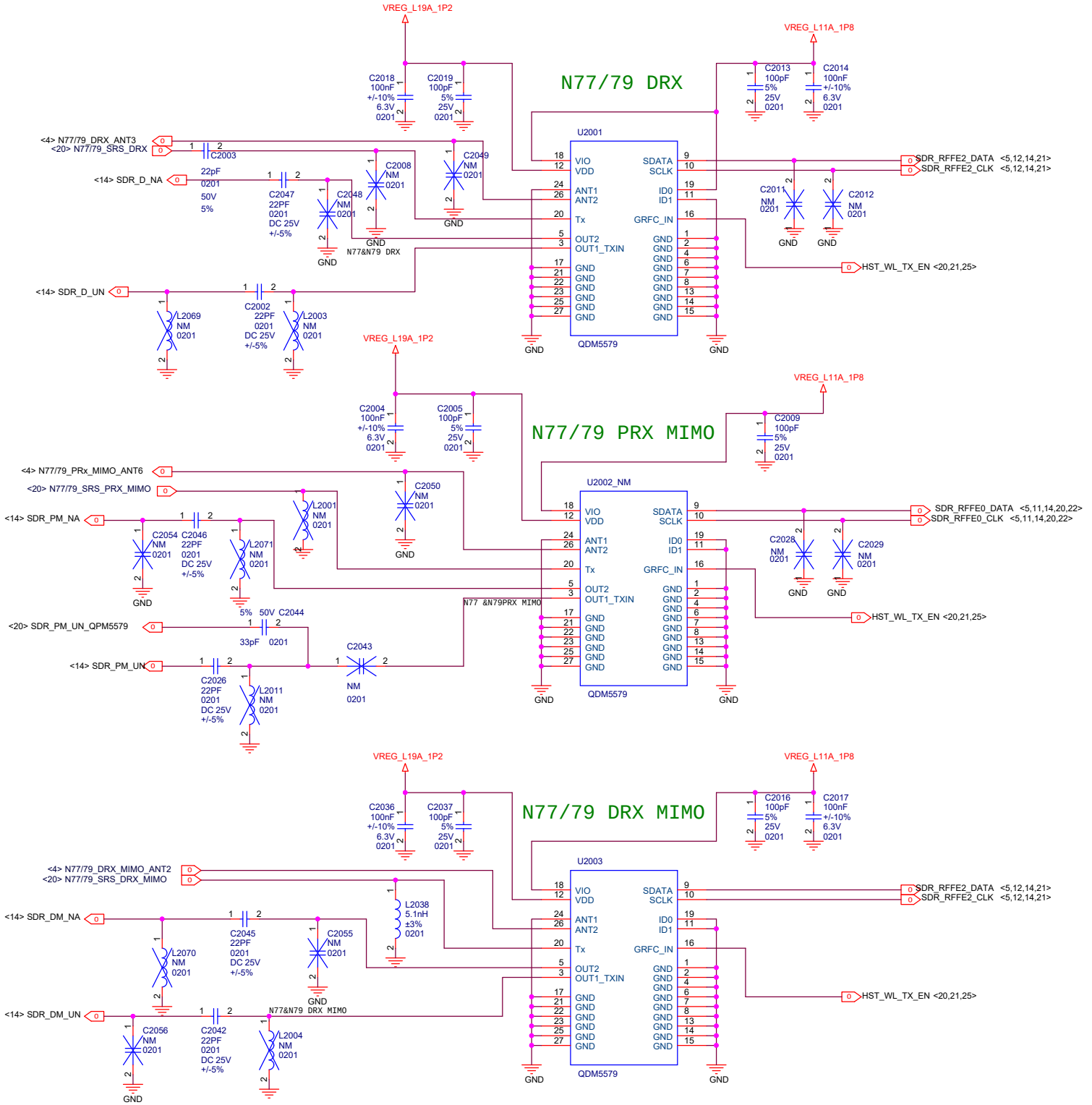

MI PHONE		
Title: J17 MAIN		
Size: A3	Document Number	Rev
Date: Tuesday, August 25, 2020	Sheet 21 of 74	

n41 PAM

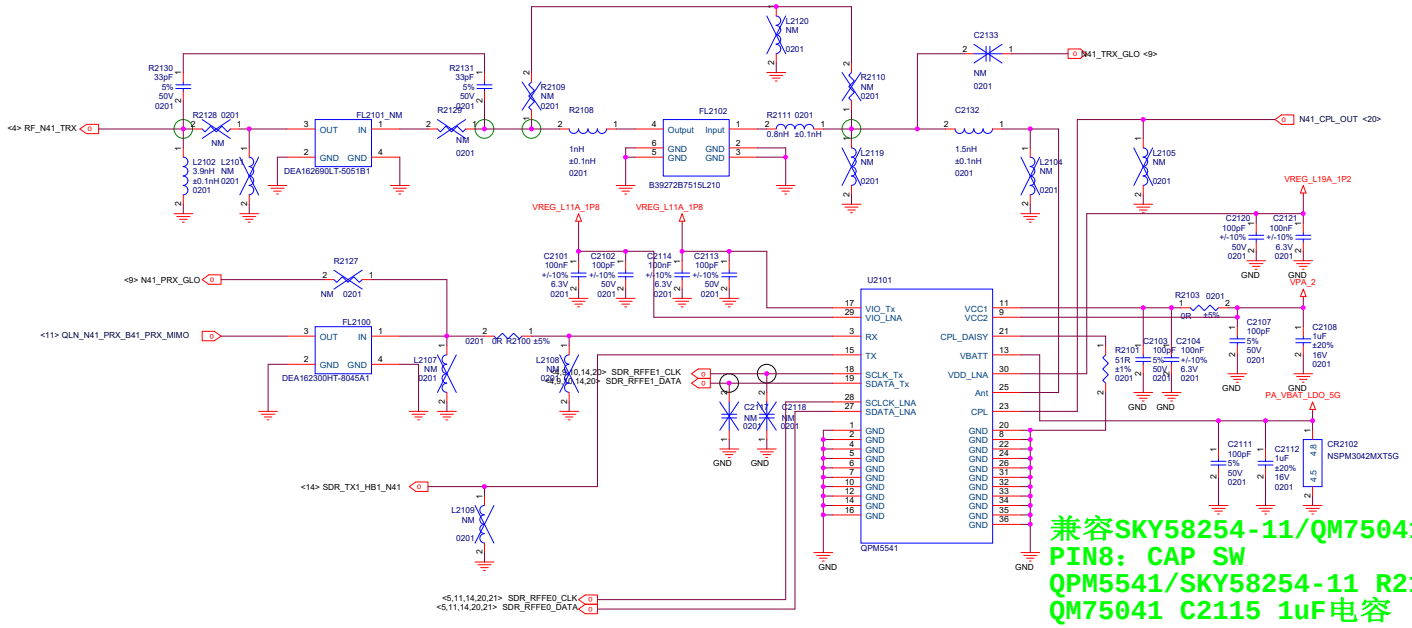

兼容SKY58254-11/QM75041
PIN8：CAP SW
QPM5541/SKY58254-11 R2116 0R接地
QM75041 C2115 1uF电容

兼容SKY58254-11/QM75041
PIN27/28/29/30接地

Title	J17 MAIN		
Size A2	Document Number NFC		Rev P0
Date: Tuesday, August 25, 2020		Sheet	

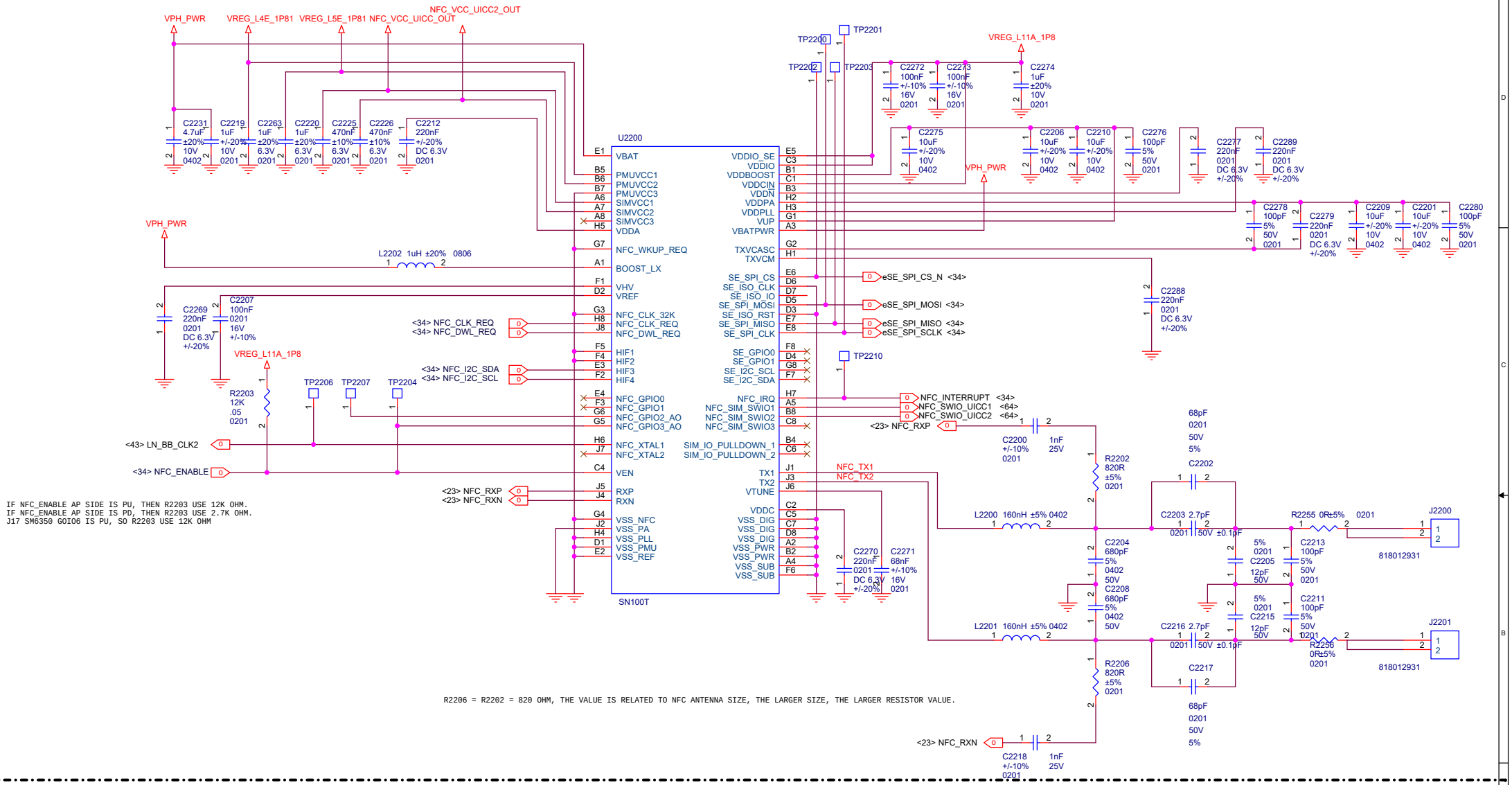

Title	J17 MAIN	
Size A3	Document Number Reserved(for PA)	Rev P0
Date: Tuesday, August 25, 2020	Sheet 23	74

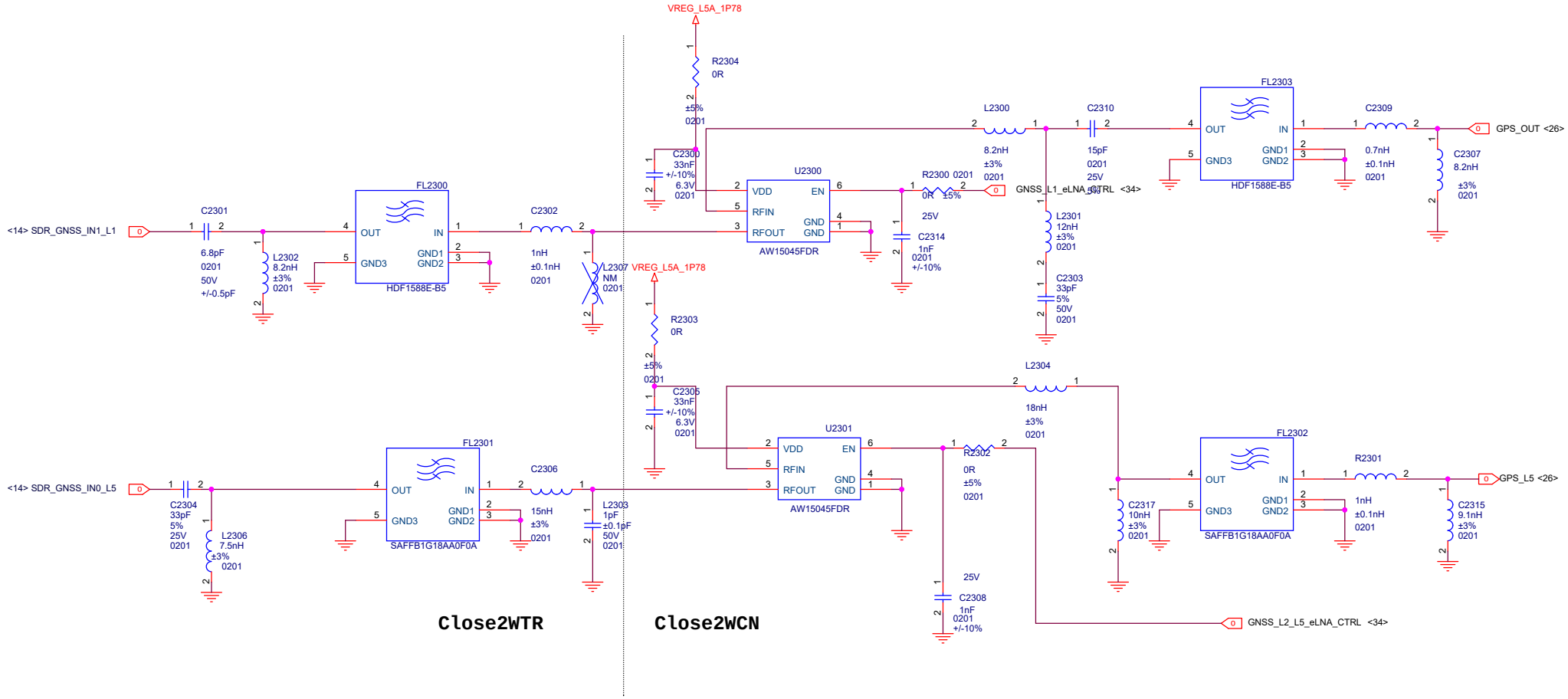

Title	J17 MAIN	
Size A3	Document Number Reserved(for 11ad/11ax)	Rev P0
Date: Tuesday, August 25, 2020	Sheet 24 74	

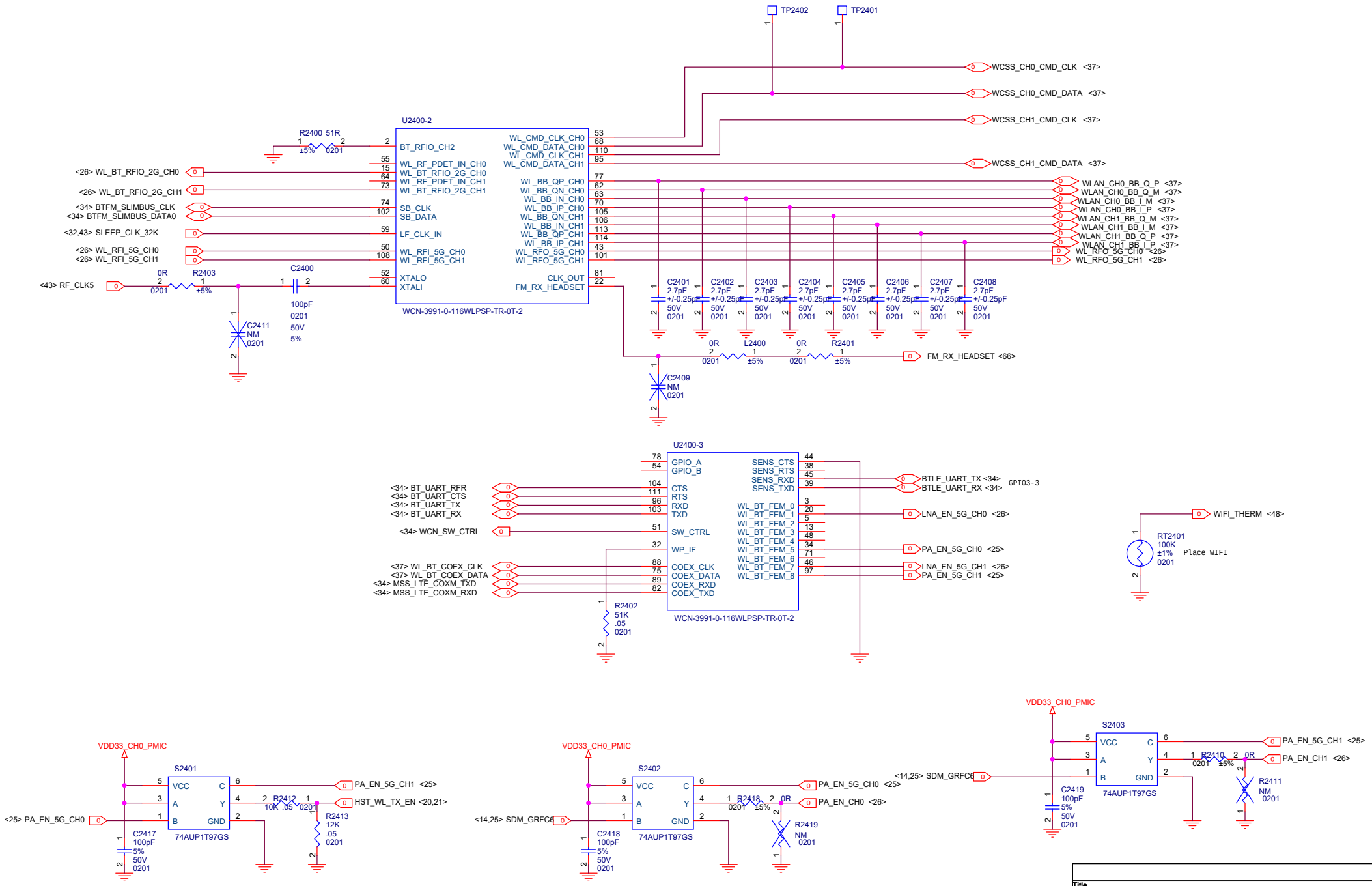

Title	J17 MAIN	
Size A3	Document Number WIFI Interface	Rev P0
Date: Tuesday, August 25, 2020	Sheet 25	74

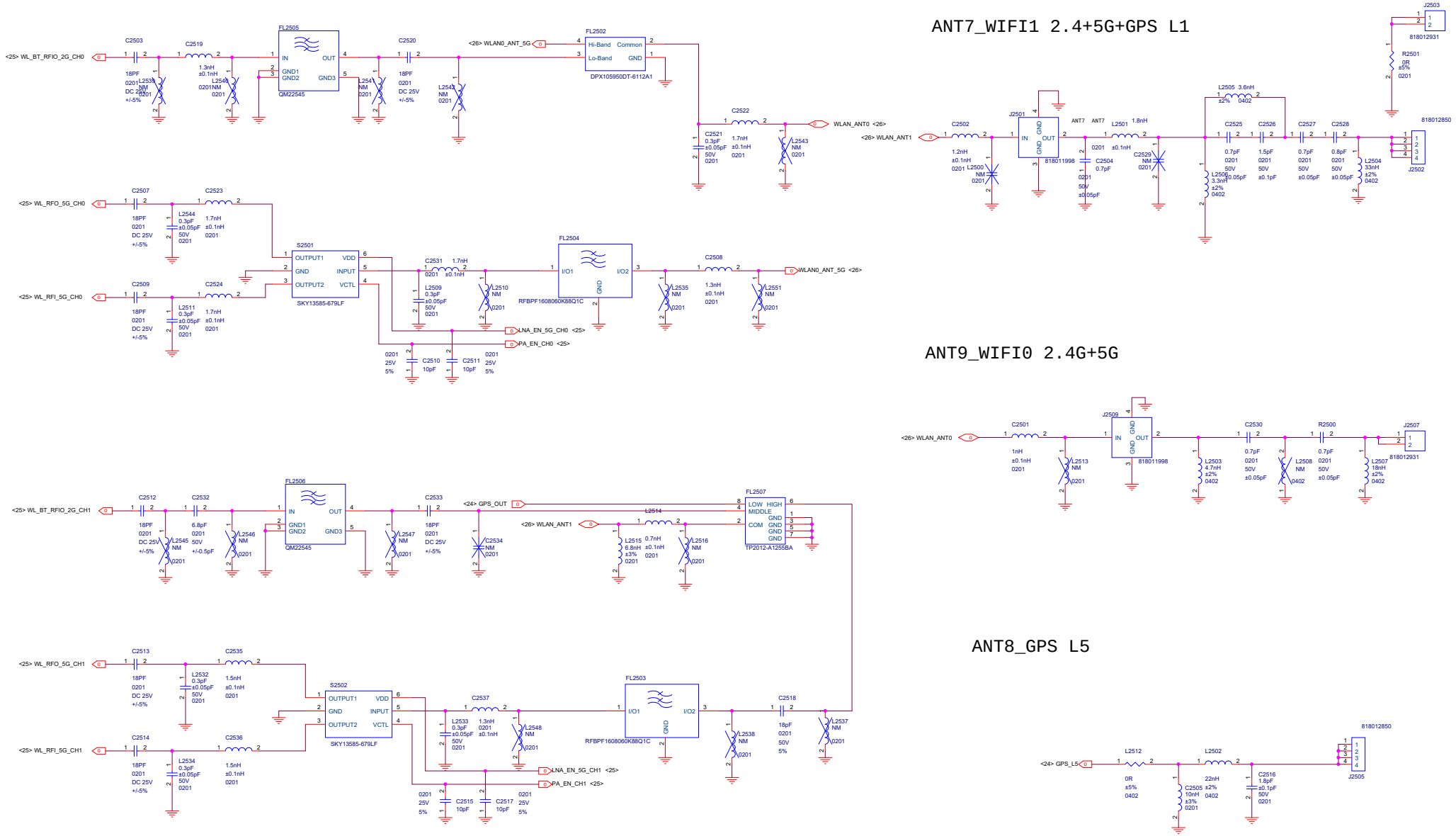

Title	J17 MAIN	
Size A2	Document Number WIFI FEM	Rev P0
Date: Tuesday, August 25, 2020	Sheet	

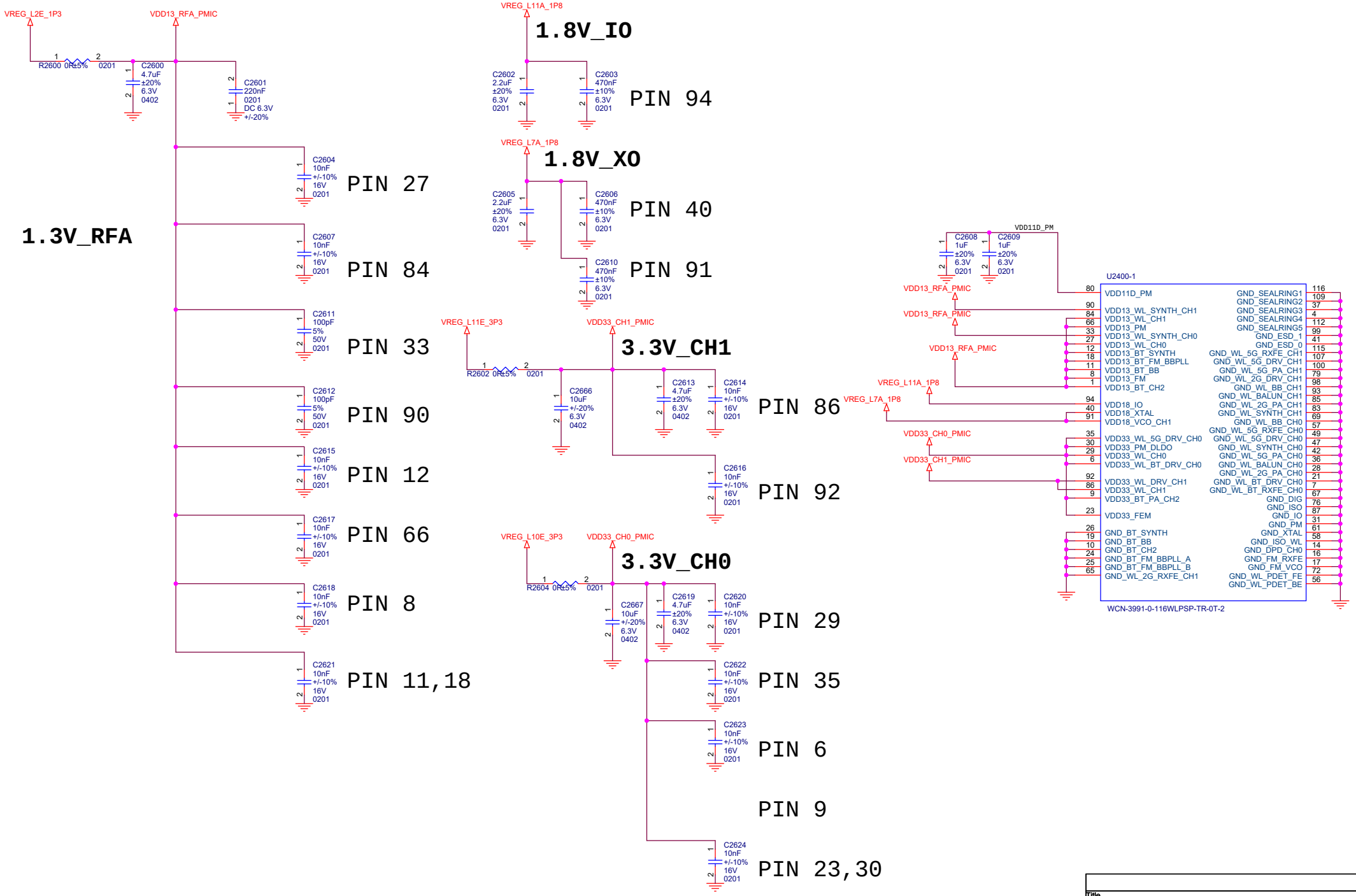

Title	J17 MAIN	
Size A3	Document Number WIFI Decouping	Rev P0
Date: Tuesday, August 25, 2020	Sheet 27	74

Title	J17 MAIN
Size A3	Document Number Reserved(for 11ad/11ax)
Rev	P0
Date:	Tuesday, August 25, 2020
Sheet	28 74

Title	J17 MAIN
Size A3	Document Number Reserved(for 11ad/11ax)
Rev	P0
Date:	Tuesday, August 25, 2020
Sheet	29 74

Title	J17 MAIN
Size A3	Document Number Reserved(for Digital FM)
Rev	P0
Date:	Tuesday, August 25, 2020
Sheet	30 74

Title	J17 MAIN
Size A3	Document Number Reserved(for Analog FM)
Rev	P0
Date:	Tuesday, August 25, 2020
Sheet	31 74

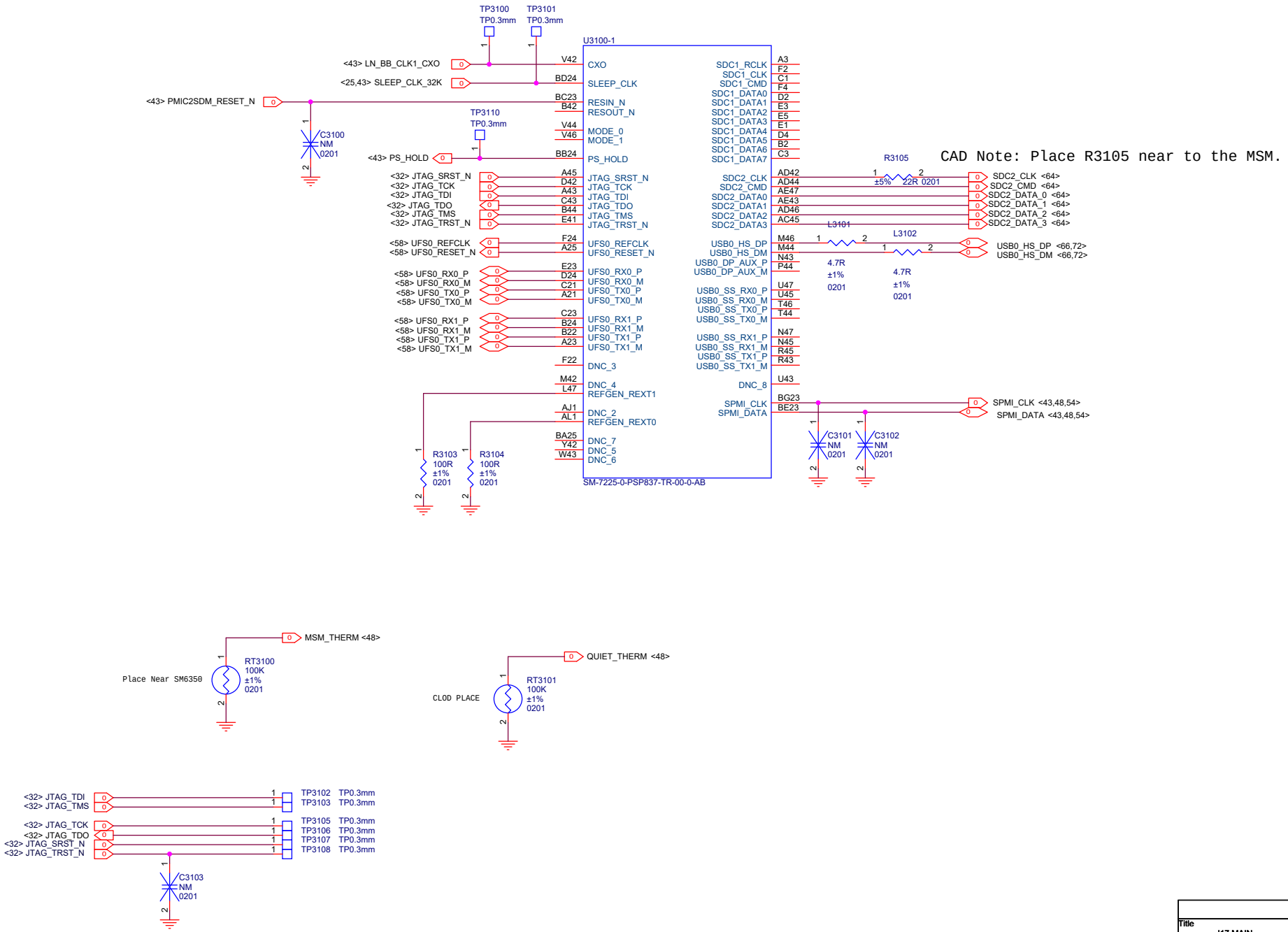

Title	J17 MAIN	
Size A3	Document Number SM6350 CONTROL and UFS	Rev P0
Date: Tuesday, August 25, 2020	Sheet 32	74

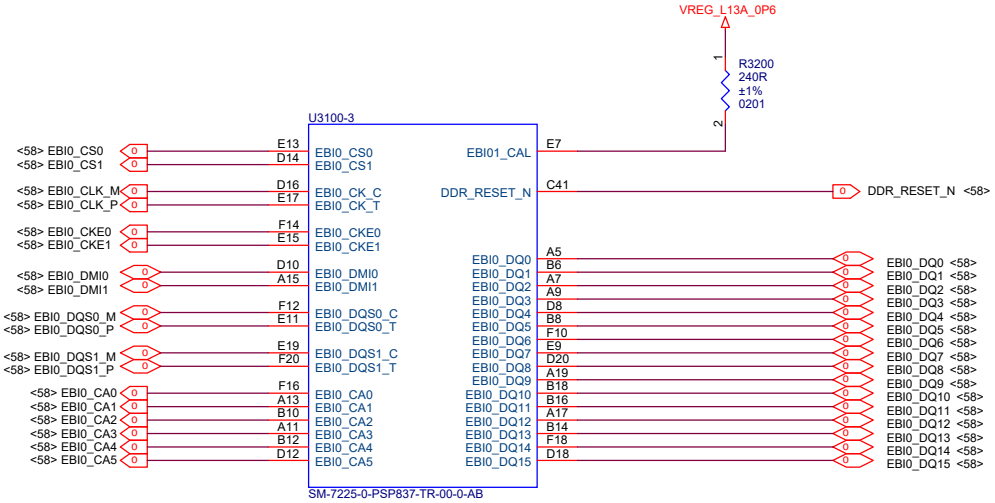

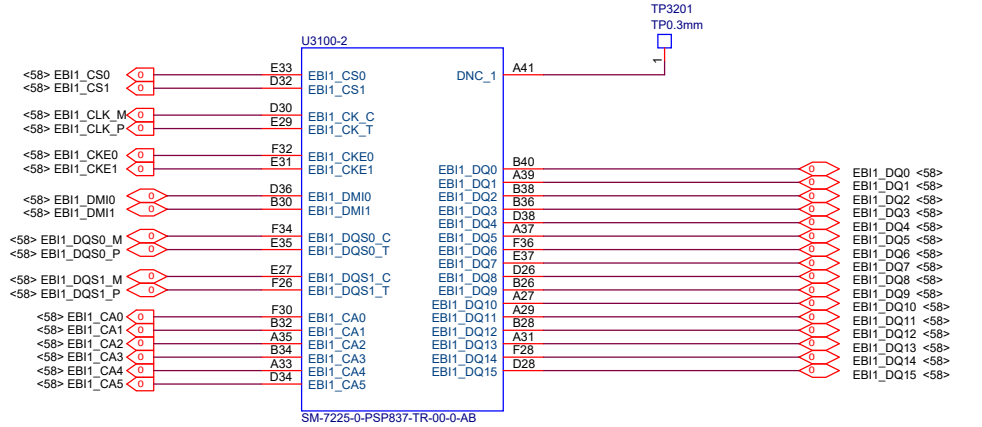

Title	J17 MAIN	
Size A3	Document Number SM6350 LPDDR4x	Rev P0
Date: Tuesday, August 25, 2020	Sheet 33 74	

Note: This external pull-up of 2K is used on the GPIO_12 controlling NFC_EN (VEN) control of SN100U/SN100T to meet the low power mode entry timing requirement. Please confirm with your NFC vendor (based on your NFC solution) on the timing requirement and confirm if the external pull-up is required or otherwise.

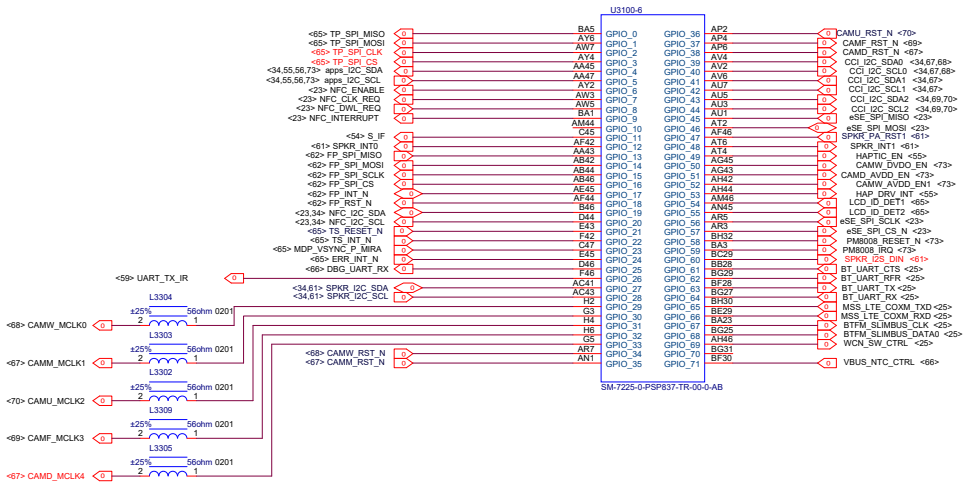

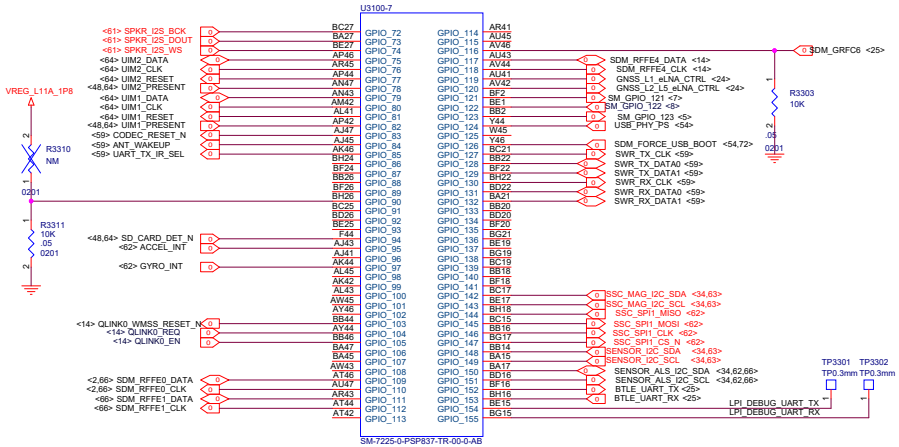

I2C PULL- UP RESISTORS

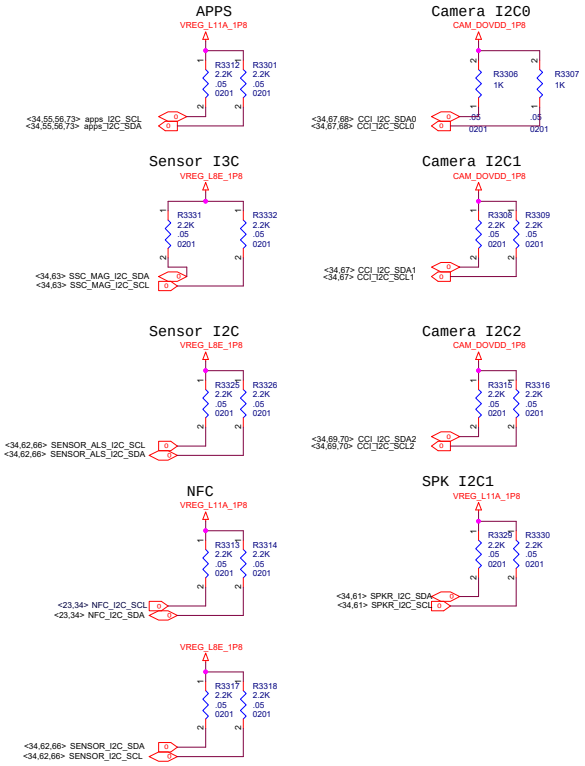

Title	J17 MAIN	
Size A2	Document Number SM6350 GPIO	Rev P0
Date: Tuesday, August 25, 2020	Sheet	

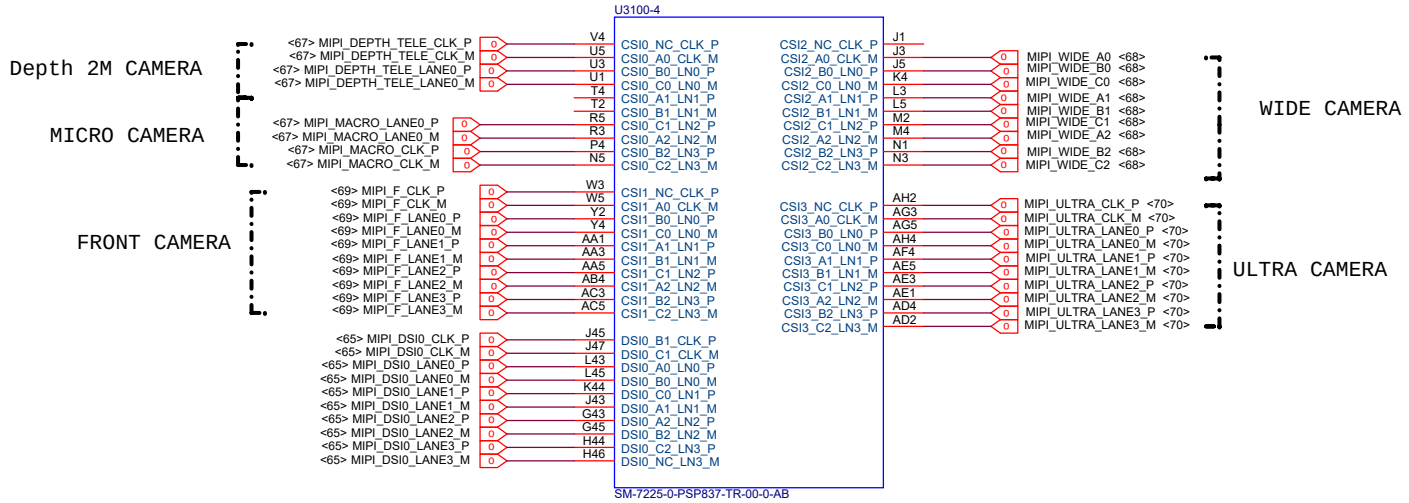

Title	J17 MAIN	
Size A3	Document Number SM6350 MIPI	Rev P0
Date: Tuesday, August 25, 2020	Sheet 35	74

Title	J17 MAIN
Size A3	Document Number Reserved(for MIPI)
Rev	P0
Date:	Tuesday, August 25, 2020
Sheet	36 74

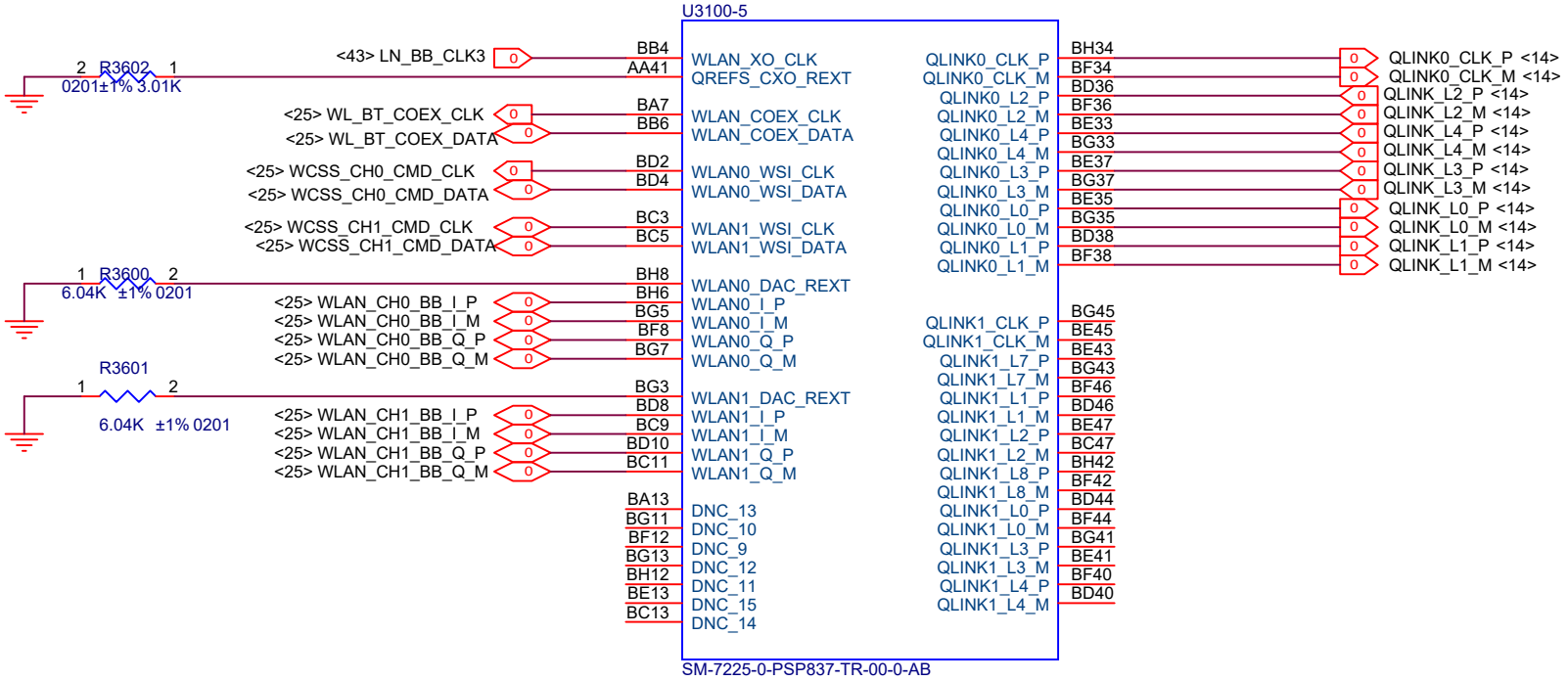

Title	J17 MAIN	
Size A4	Document Number SM6350 WLAN/QLINK	Rev P0
Date: Tuesday, August 25, 2020	Sheet 37	74

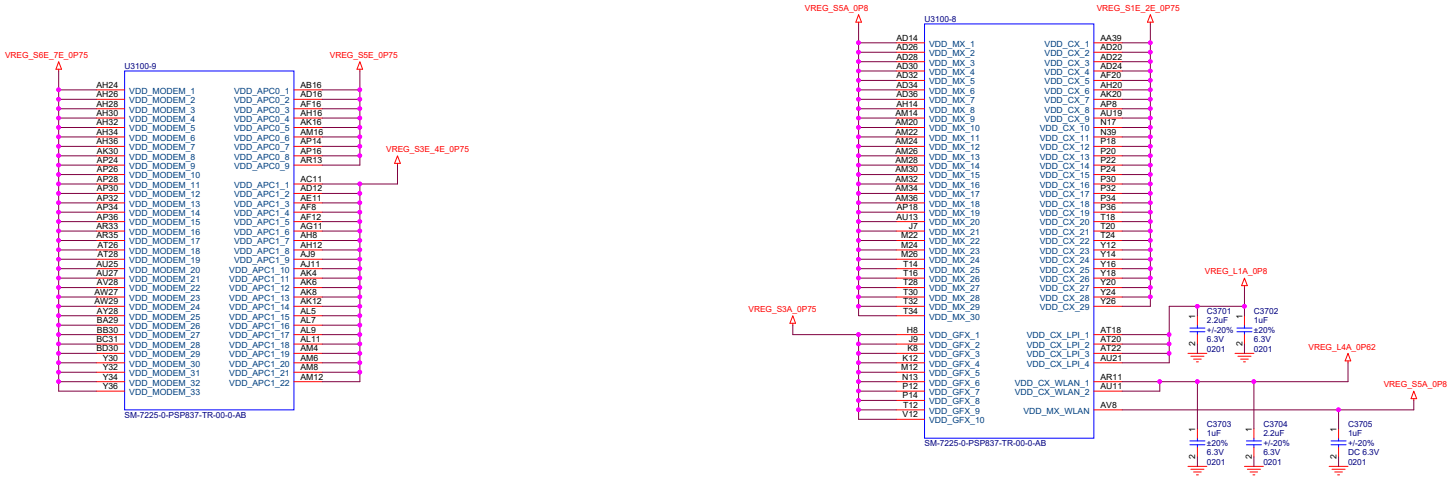

Title	J17 MAIN		
Size A2	Document Number SM6350 PWR1		Rev P0
Date: Tuesday, August 25, 2020		Sheet	

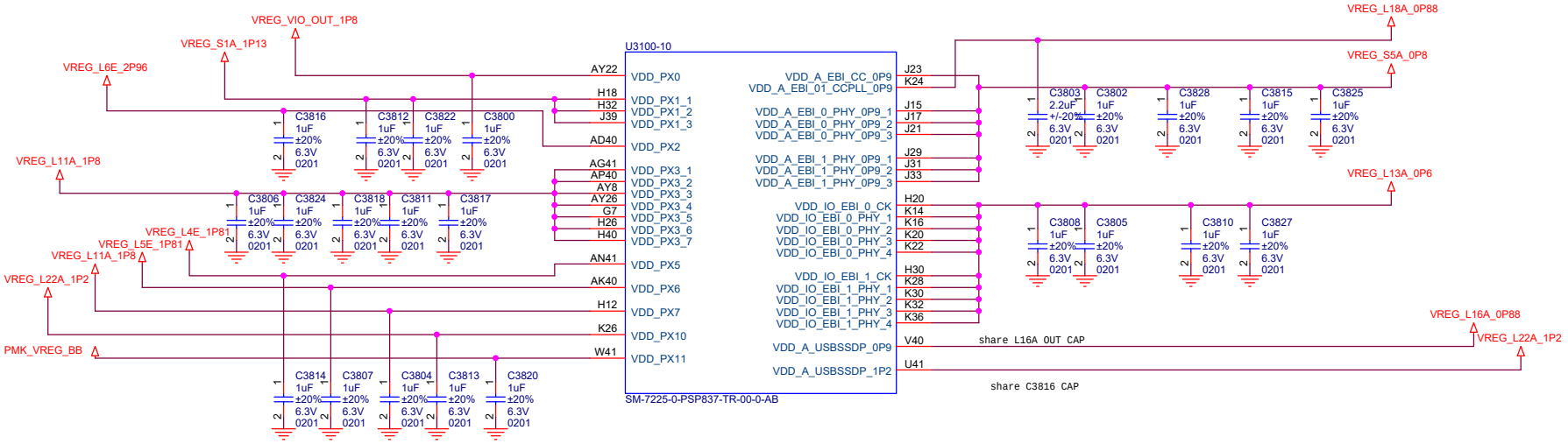

Title	J17 MAIN	
Size A3	Document Number SM6350 PWR2	Rev P0
Date: Tuesday, August 25, 2020	Sheet 39	74

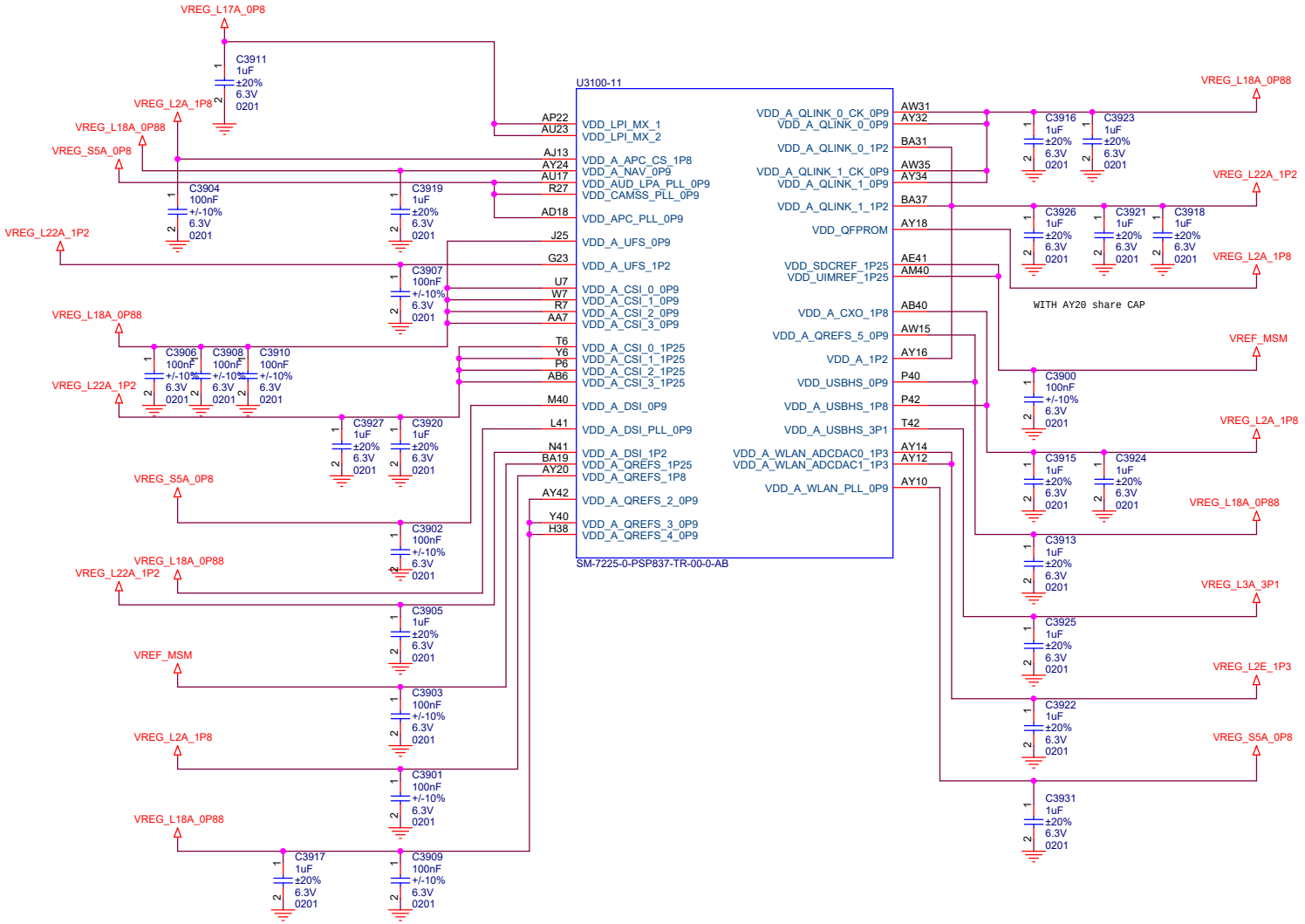

Title	J17 MAIN
Size A3	Document Number SM6350 PWR3
Rev	P0
Date: Tuesday, August 25, 2020	Sheet 40 74

PM6350 FTS Bucks

PM6150L FTS Bucks

Route VSNS* diff pair out from Cap
back to appropriate pins at PMIC

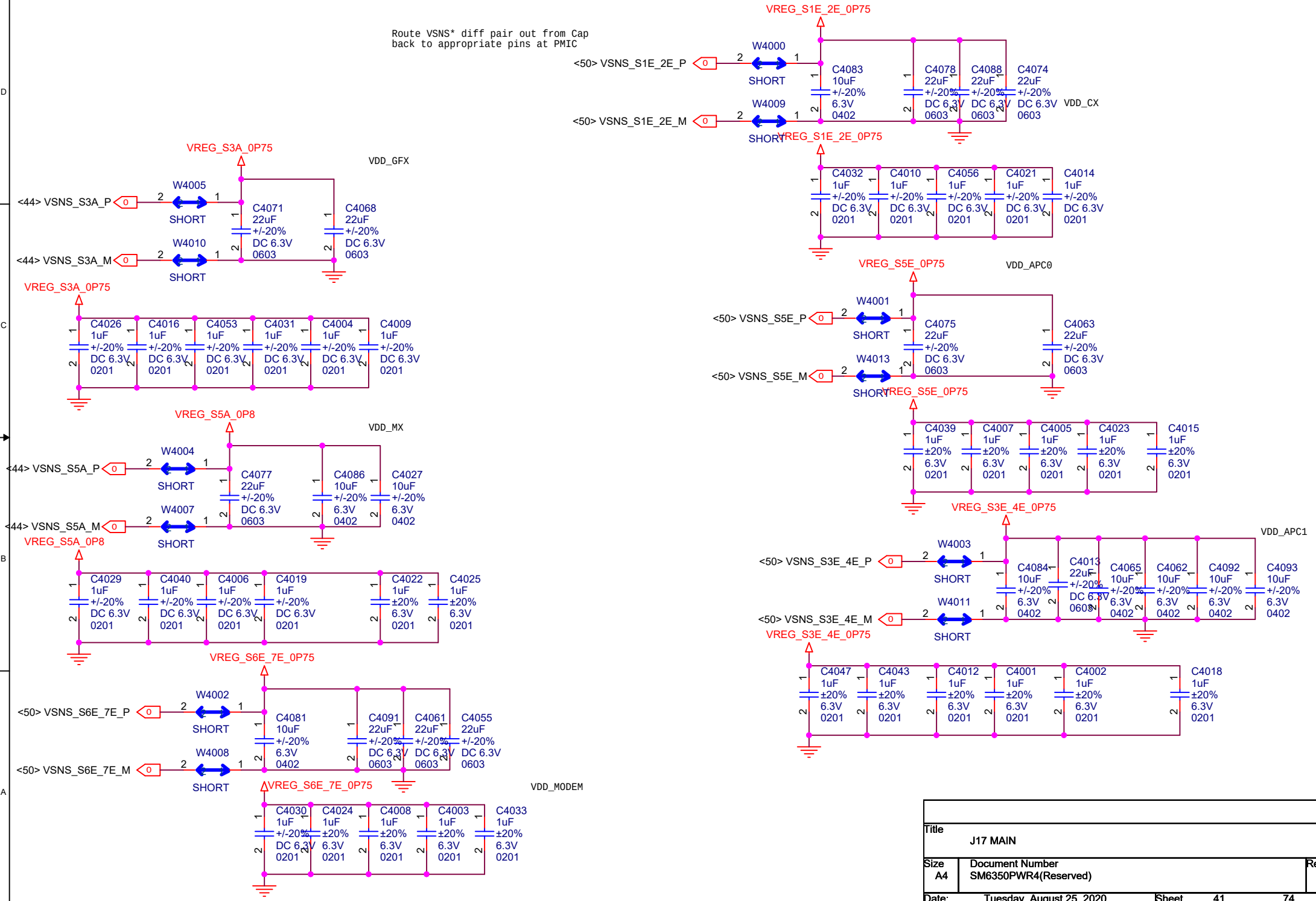

Title	J17 MAIN	
Size A4	Document Number SM6350PWR4(Reserved)	Rev P0
Date: Tuesday, August 25, 2020	Sheet 41	74

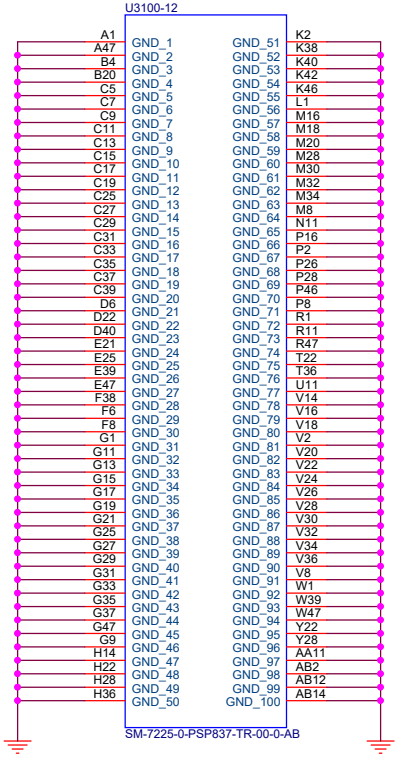

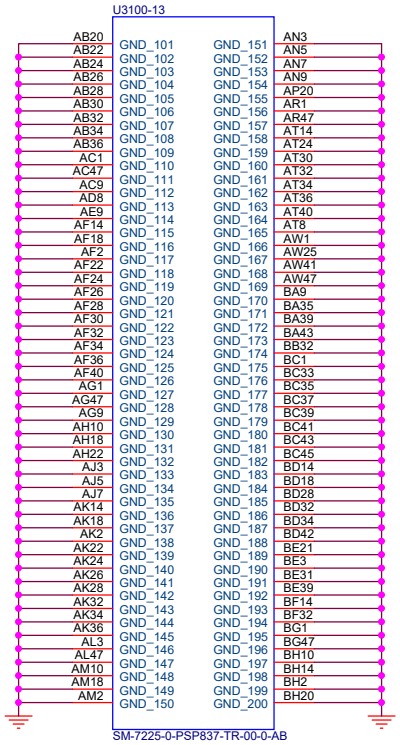

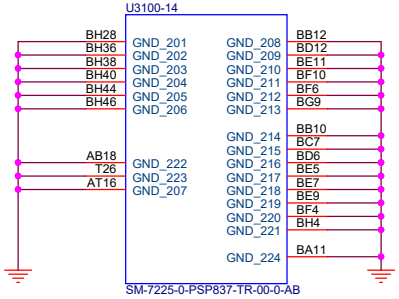

Title	J17 MAIN	
Size A3	Document Number SM6350 GND	Rev P0
Date: Tuesday, August 25, 2020	Sheet 42	74

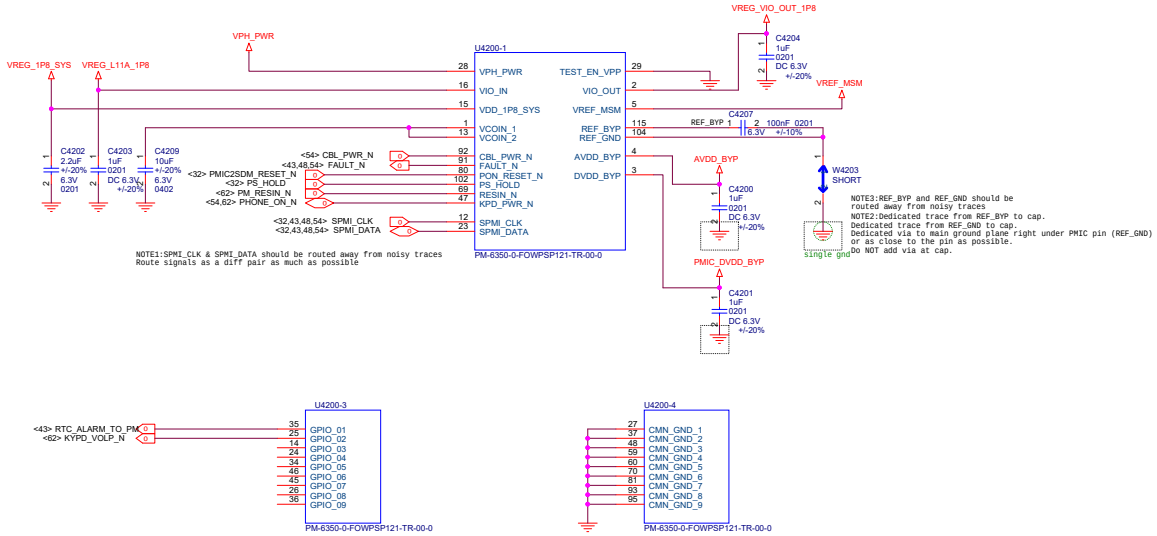

PMK8003_CLOCKS

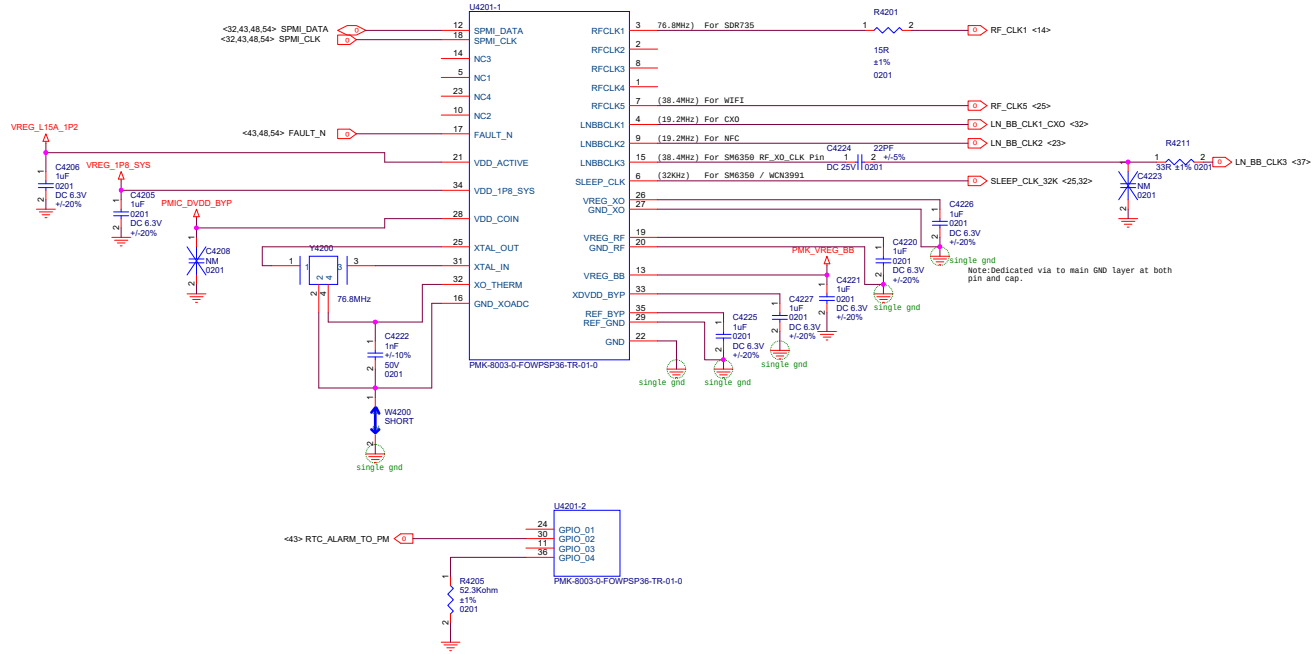

Title	J17 MAIN	
Size A2	Document Number PM6350 CLKs/Control_GND	Rev P0
Date: Tuesday, August 25, 2020	Sheet	

NOTE: SNS_Sx_P/M should be routed diff pair out
from Cap back toappropriate pins at PMIC

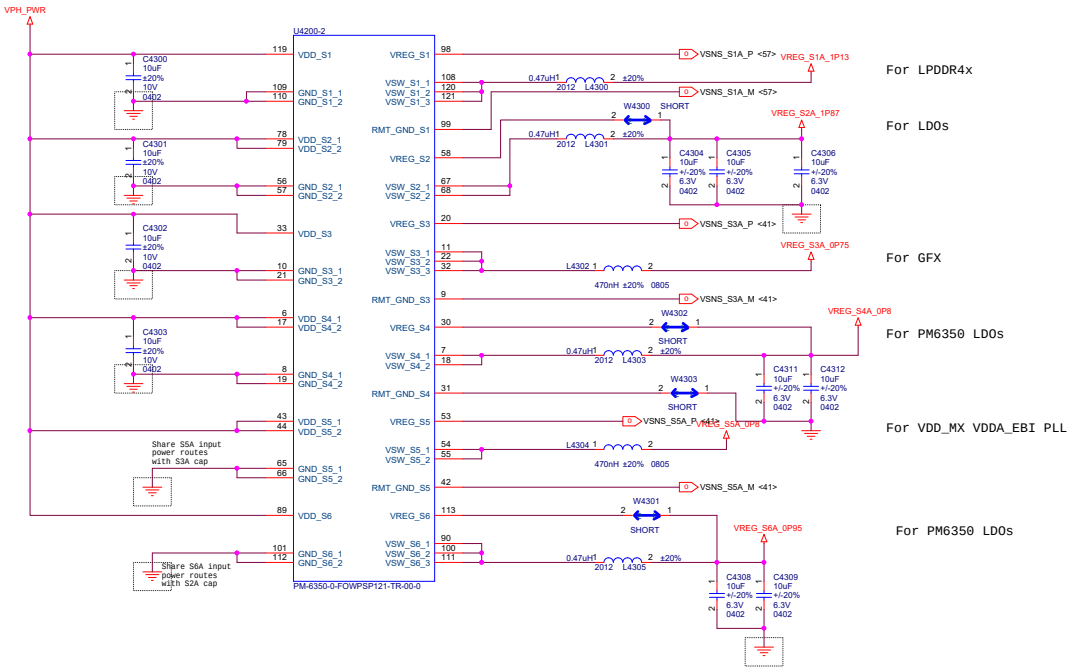

For LPDDR4x

For LDOs

For GFX

For PM6350 LDOs

For VDD_MX VDDA_EBI PLL

For PM6350 LDOs

Title	J17 MAIN	
Size A2	Document Number PM6350 Buck Converter	Rev P0
Date: Tuesday, August 25, 2020	Sheet	

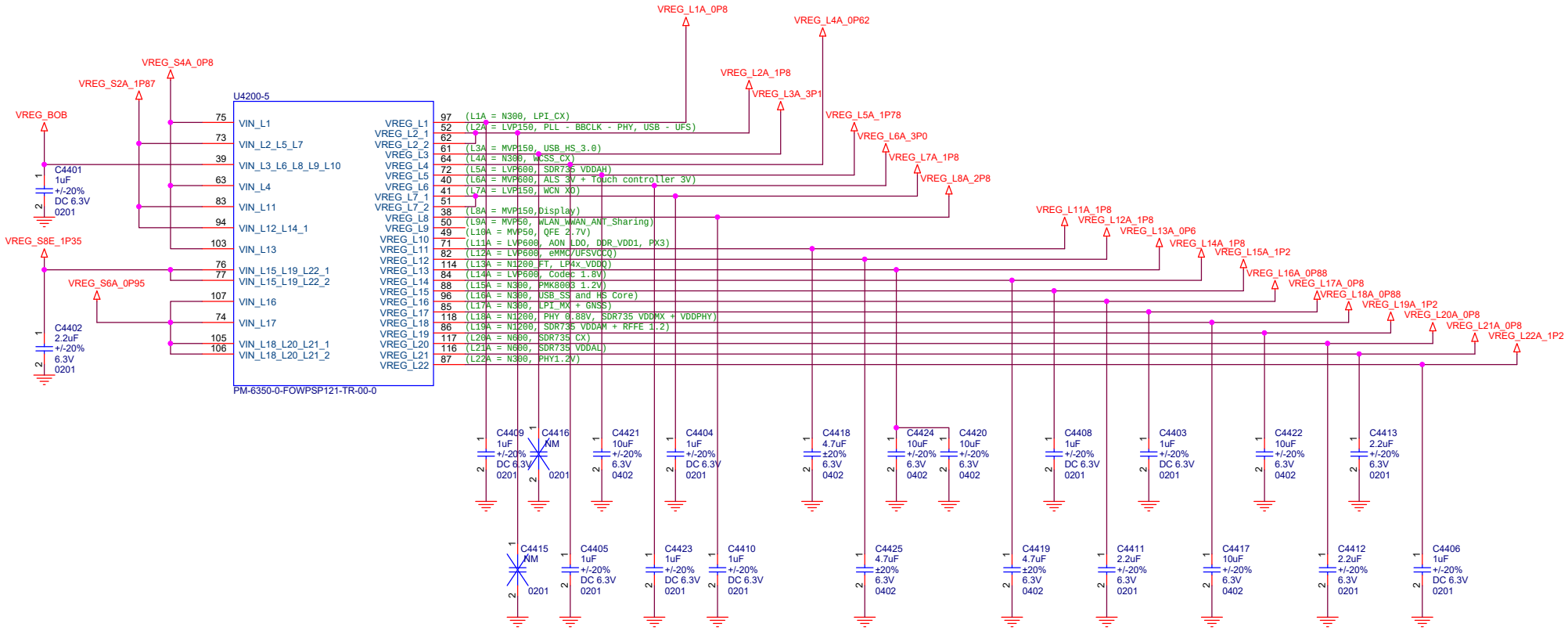

Note:Place cap close to PMIC and DNI by default unless input ESL > 15nH or if VI deems it necessary

Note: add C2306 when the output ESR>200mohm

Title	J17 MAIN	
Size A3	Document Number PM6350 LDO Circuits	Rev P0
Date: Tuesday, August 25, 2020	Sheet 45	74

Title	J17 MAIN		
Size A2	Document Number PM6350 LDOs		Rev P0
Date: Tuesday, August 25, 2020		Sheet	

Title	J17 MAIN
Size A4	Document Number PM6350 GPIO&GND
Rev	P0
Date:	Tuesday, August 25, 2020
Sheet	47 74

PM6150L_CONTROL/GPIO

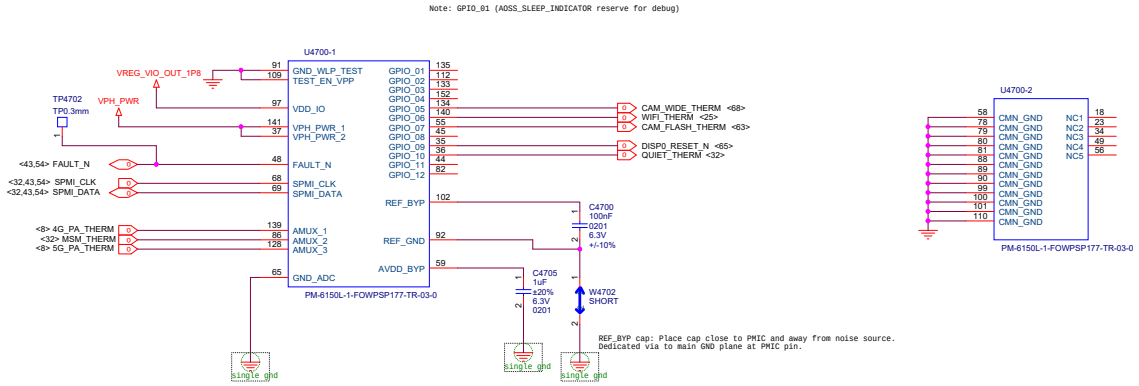

PM6150L_BOB/FLASH

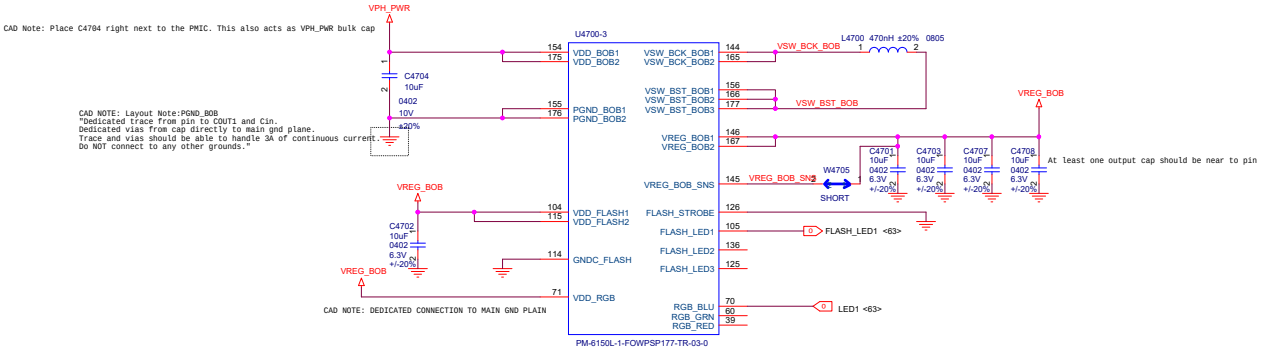

Title	J17 MAIN	
Size A2	Document Number PM6150L Control BobFlash	Rev P0
Date: Tuesday, August 25, 2020	Sheet	

Title	J17 MAIN
Size A3	Document Number PM6150LCODEC (Reserved)
Rev	P0
Date:	Tuesday, August 25, 2020
Sheet	49 74

VREG_Sx & RMT_GND_Sx should be routed as a differential pair
Do not route VREG_Sx & RMT_GND_Sx near VIN_Sx
Do not route VREG_Sx & RMT_GND_Sx near VSW_Sx unless separated by ground shield

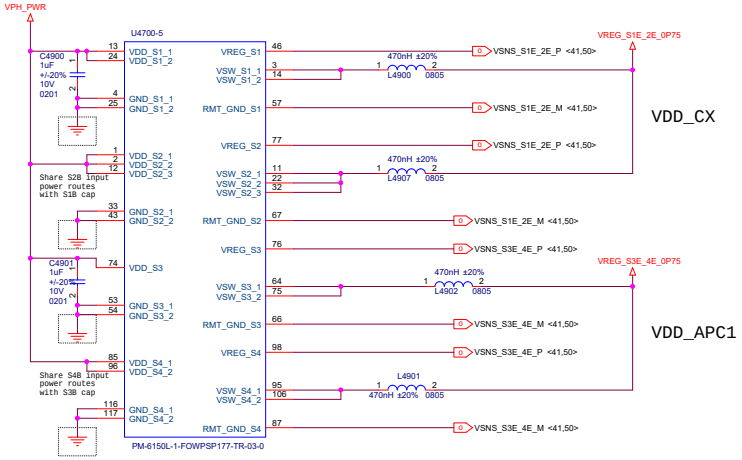

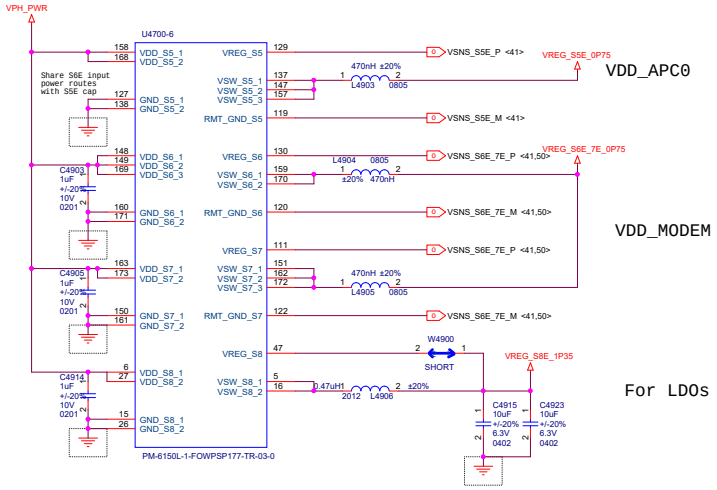

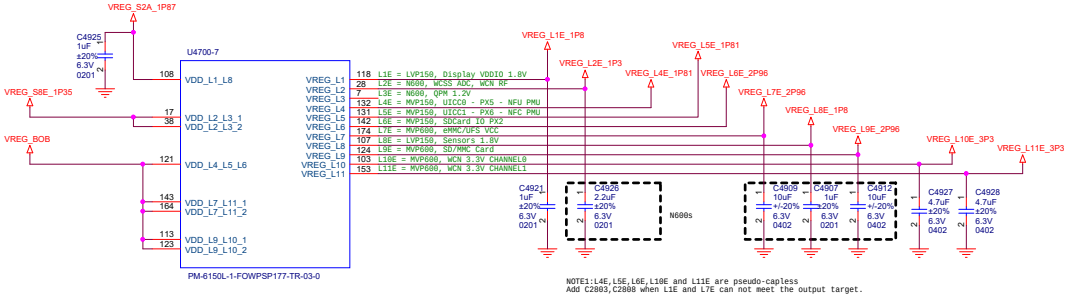

NOTE1:L4E,L5E,L6E,L10E and L11E are pseudo-capless
Add C2803,C2808 when L1E and L7E can not meet the output target.

Title	J17 MAIN	
Size A2	Document Number PM6150L Buck and LDO	Rev P0
Date: Tuesday, August 25, 2020	Sheet	

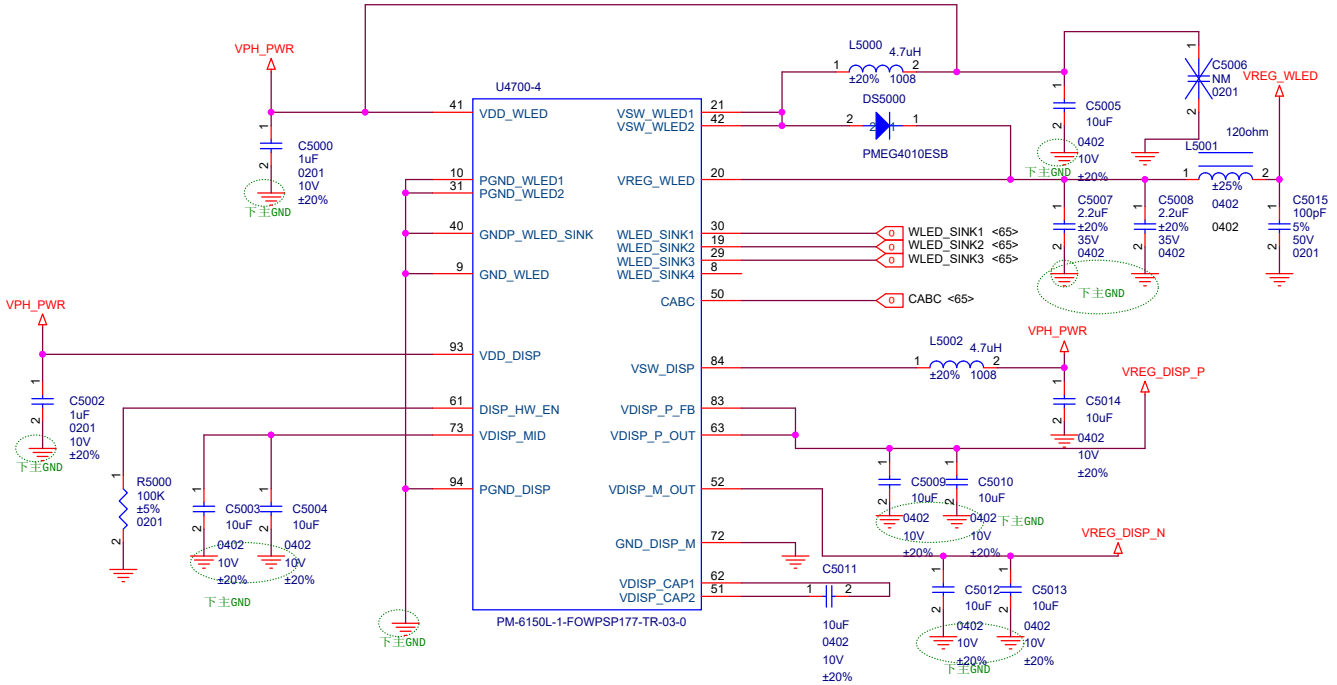

C5011 SHOULD BE CLOSE TO PINS AS POSSIBLE

Title	J17 MAIN	
Size A3	Document Number PM6150L Display (OLED)	Rev P0
Date: Tuesday, August 25, 2020	Sheet 51 74	

Title	J17 MAIN
Size A4	Document Number PM6150L LDOs
Rev	P0
Date:	Tuesday, August 25, 2020
Sheet	52 74

Title	J17 MAIN
Size A4	Document Number PM3003A_VREG
Rev	P0
Date:	Tuesday, August 25, 2020
Sheet	53 74

AVDD_BYP should be routed away from noisy traces

REF_BYP cap: Place cap close to PMIC and away from noise source.
Dedicated via to main GND plane at PMIC pin

Note:SPMI_CLK & SPMI_DATA should be routed away from noisy traces
Route signals as a diff pair as much as possible

To the Main GND directly

should be routed away from noisy traces

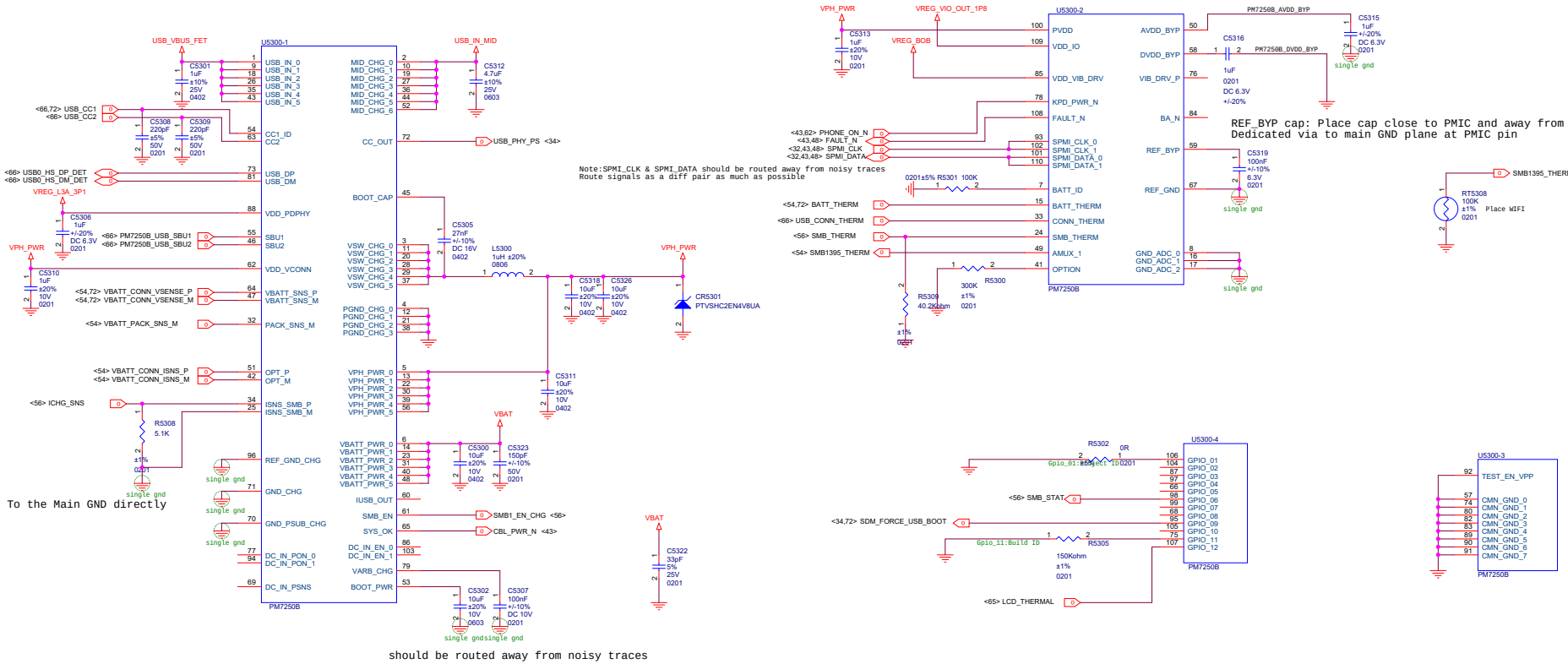

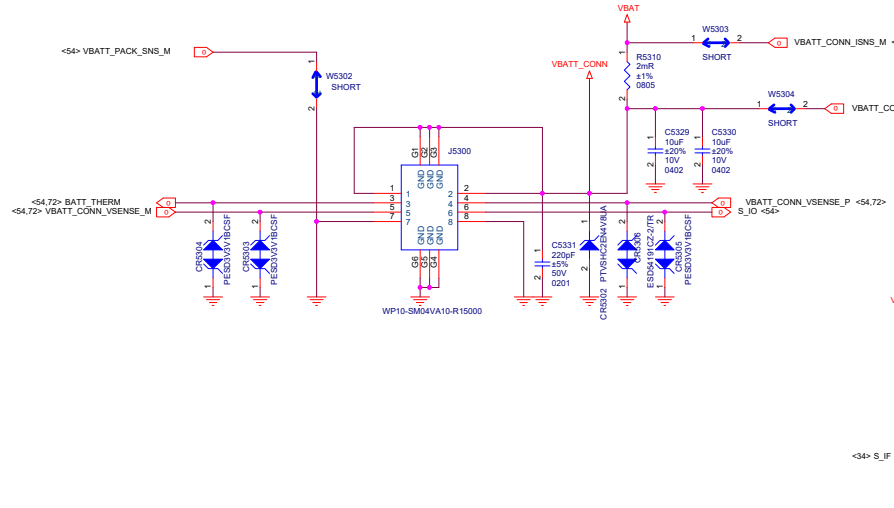

Title	J17 MAIN	
Size A2	Document Number PM7250B	Rev P0
Date: Tuesday, August 25, 2020	Sheet	

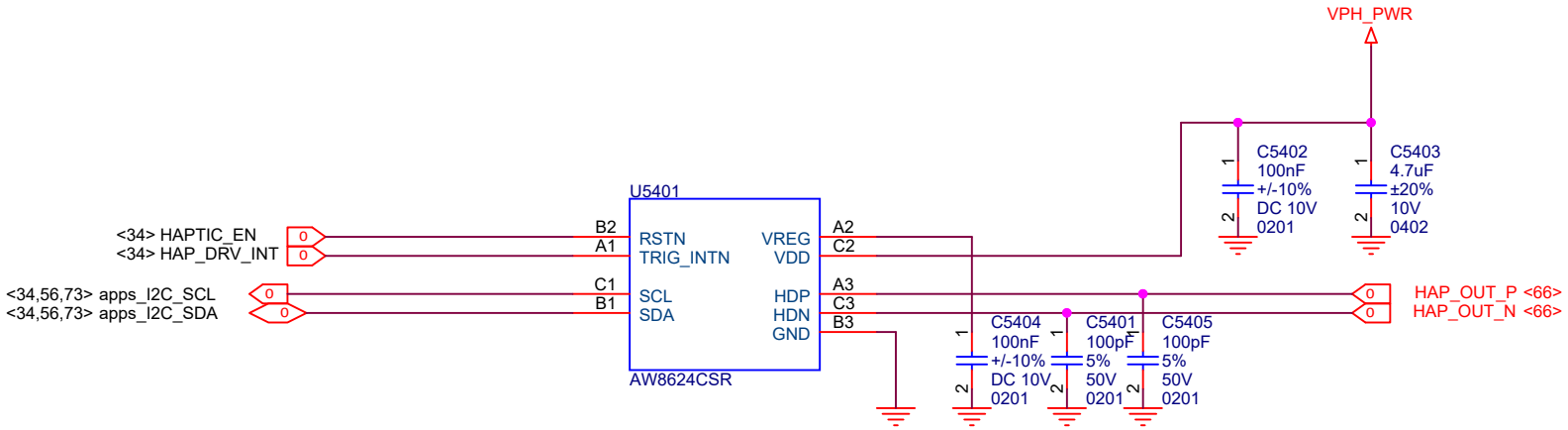

Title	J17 MAIN	
Size A4	Document Number HAPTIC	Rev P0
Date: Tuesday, August 25, 2020	Sheet 55	74

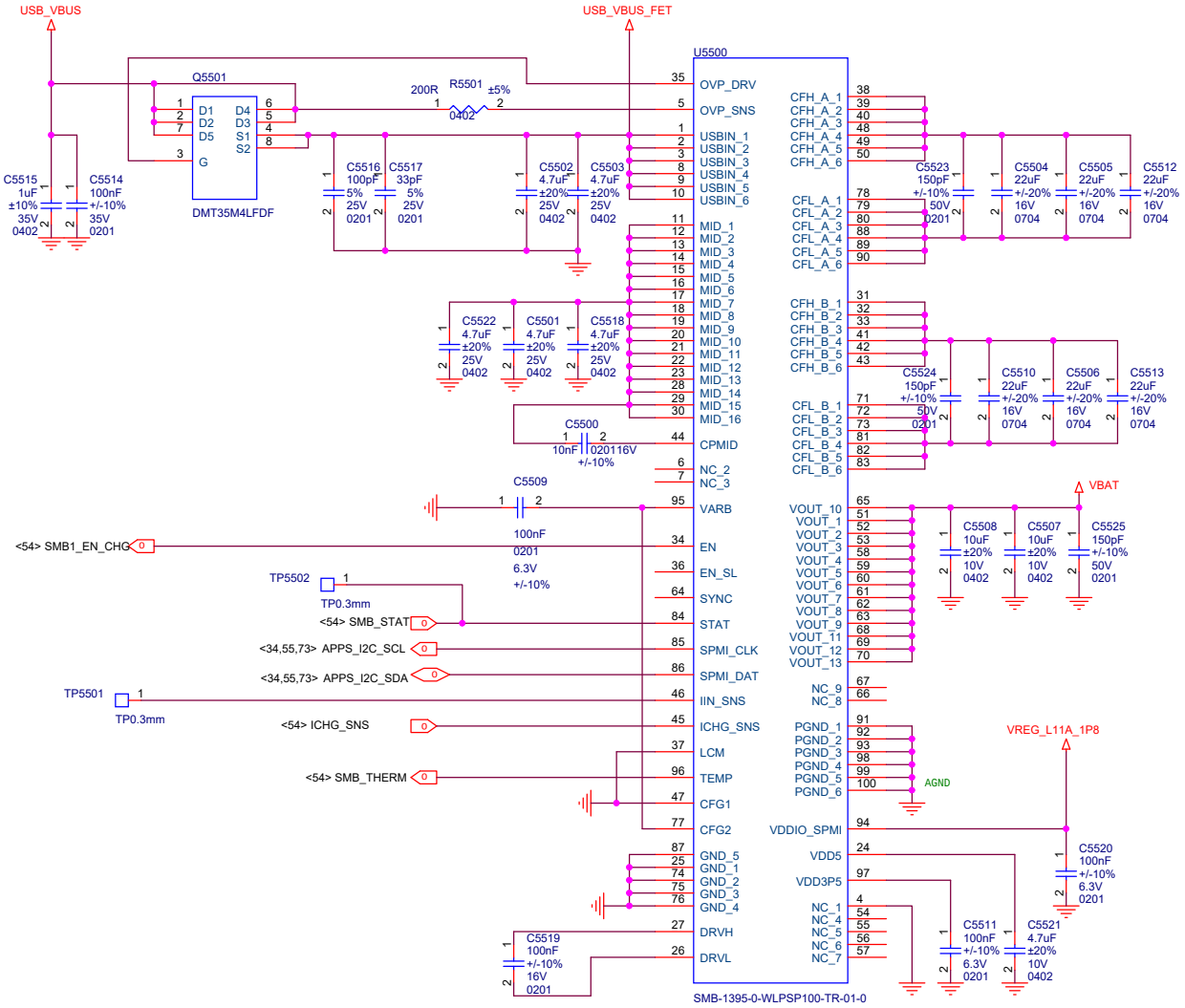

Title	J17 MAIN		
Size A3	Document Number SMB1395&WL POWER		Rev P0
Date: Tuesday, August 25, 2020	Sheet 56	74	

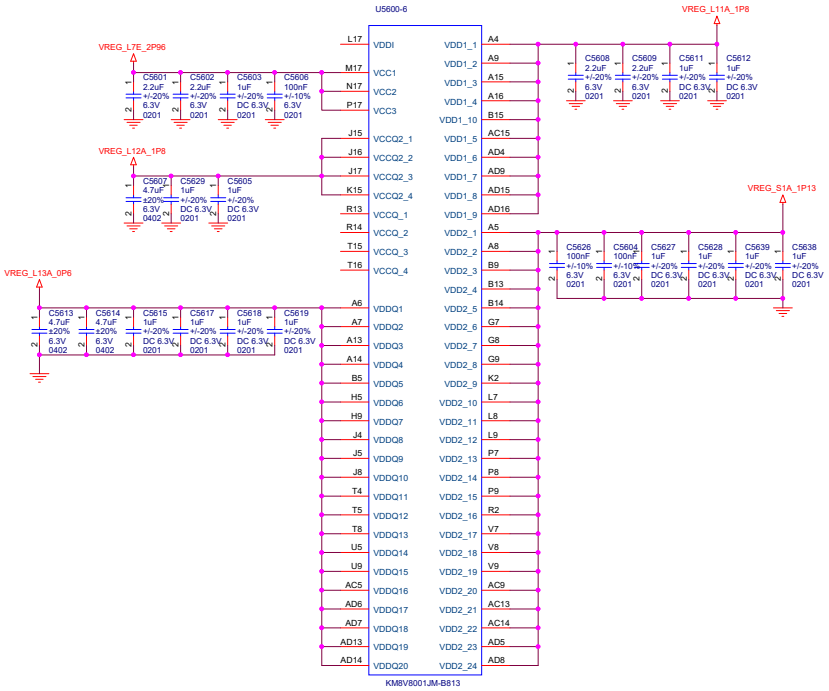

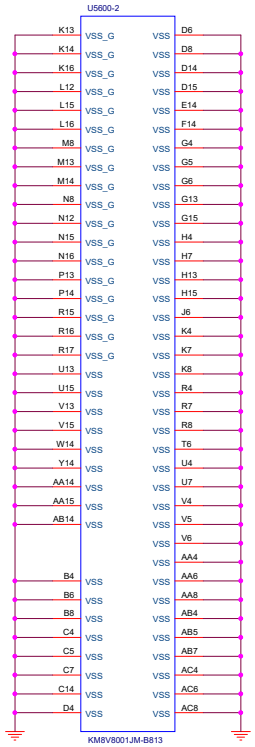

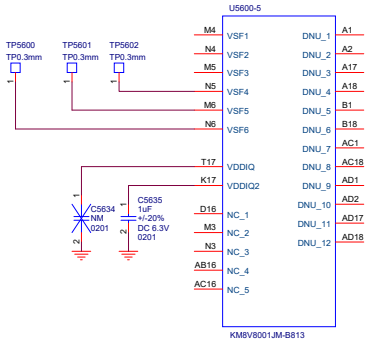

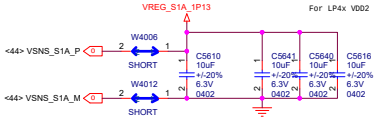

Title	J17 MAIN	
Size A2	Document Number MEMORY POWER	Rev P0
Date: Tuesday, August 25, 2020	Sheet	

UFS 2.1

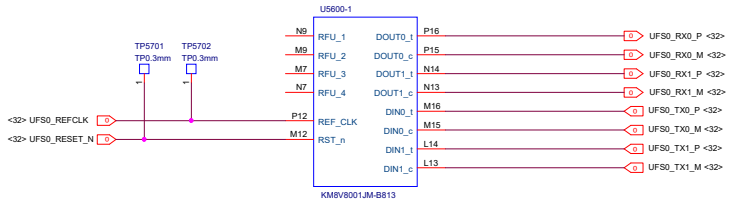

LPDDR4/4x

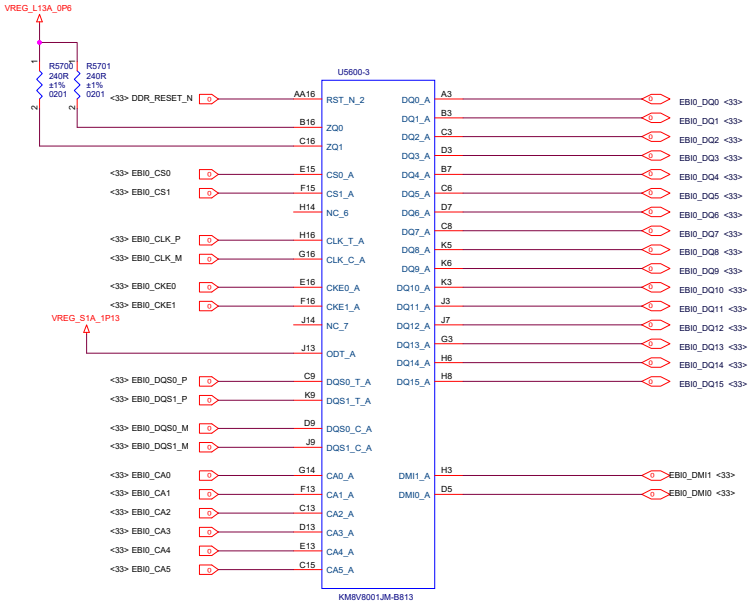

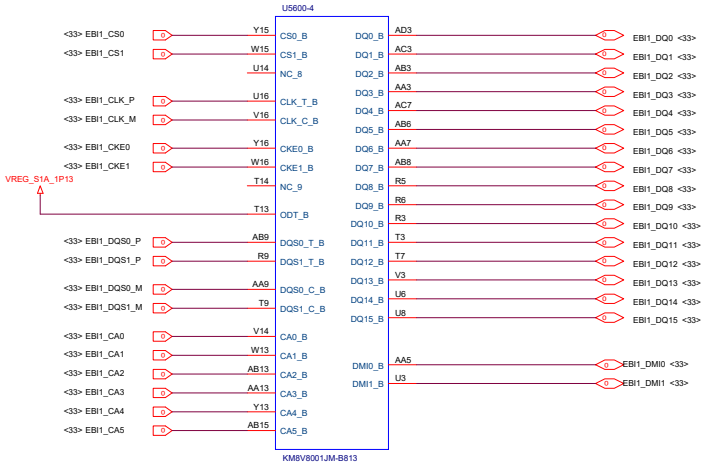

Title	J17 MAIN	
Size A2	Document Number MEMORY UFS/LPDDR4X	Rev P0
Date: Tuesday, August 25, 2020	Sheet	

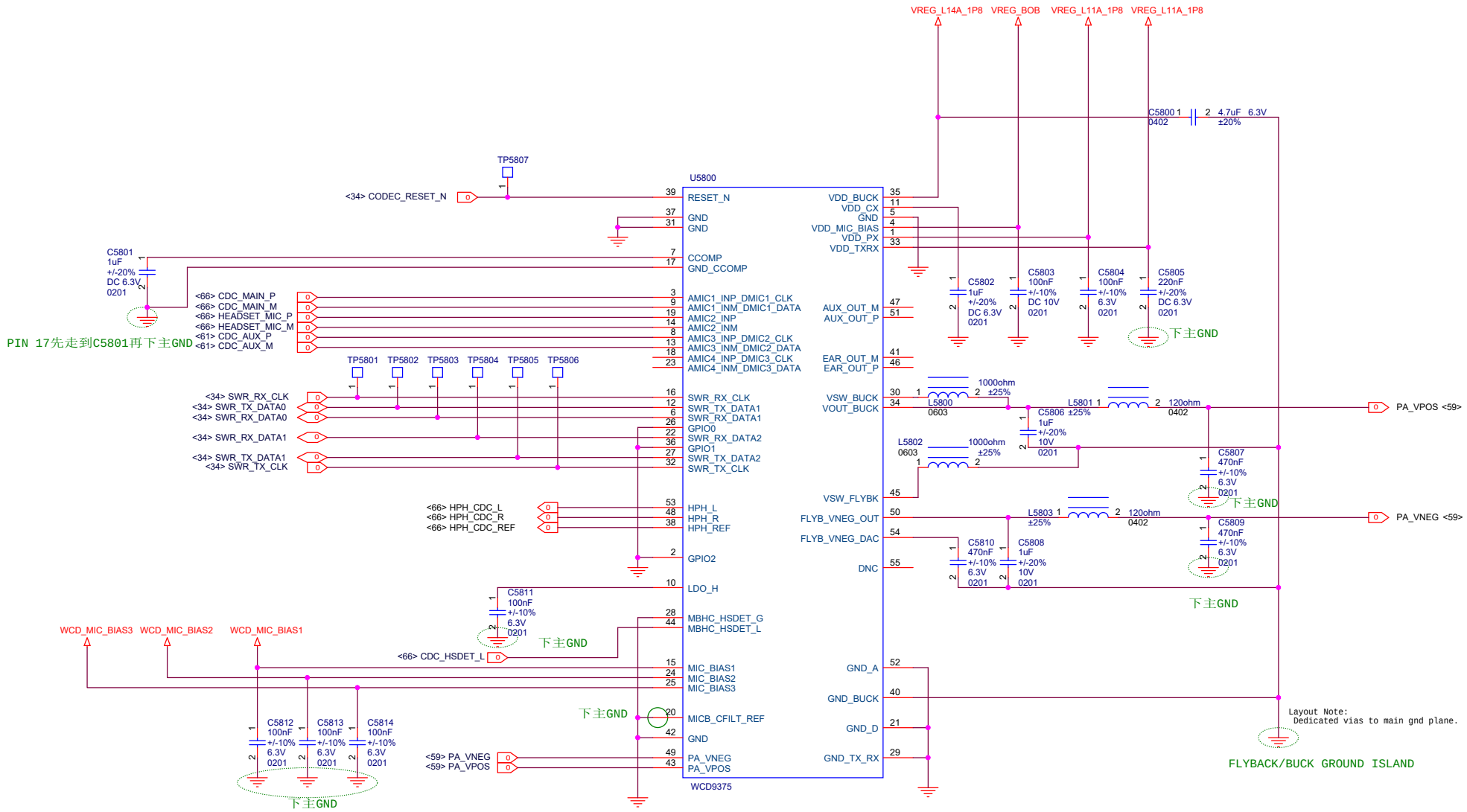

Title	J17 MAIN	
Size A3	Document Number WCD9375-1	Rev P0
Date: Tuesday, August 25, 2020	Sheet 59	74

Title	J17 MAIN
Size A3	Document Number WCD9375-2
Rev	P0
Date:	Tuesday, August 25, 2020
Sheet	60 74

AUX MIC

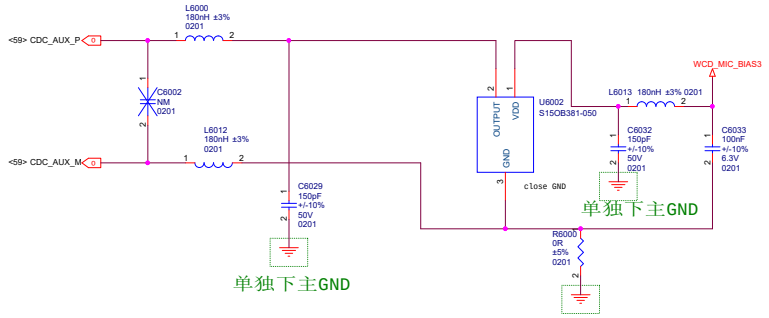

SPKR PA

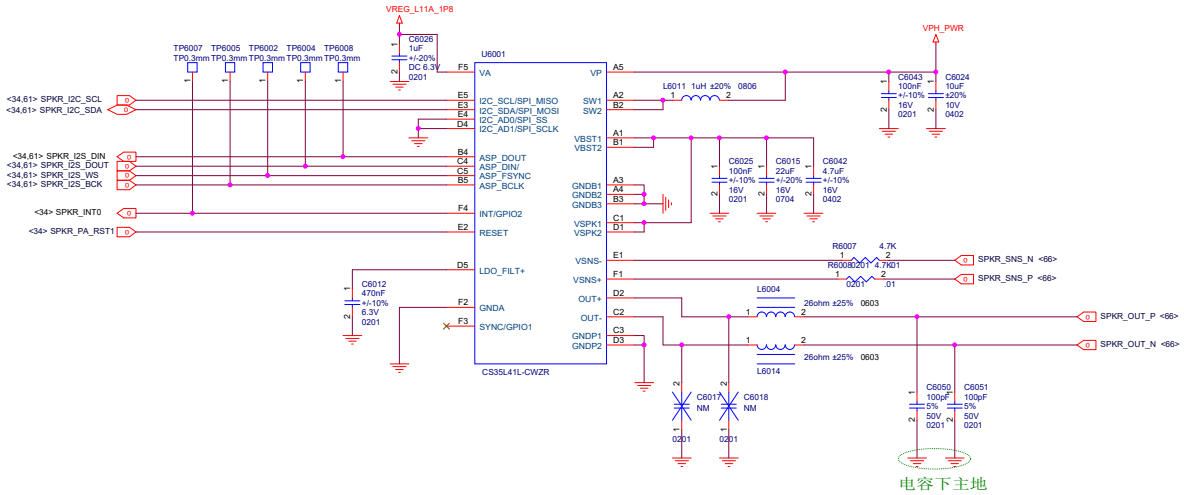

RECIVER+SPKR PA

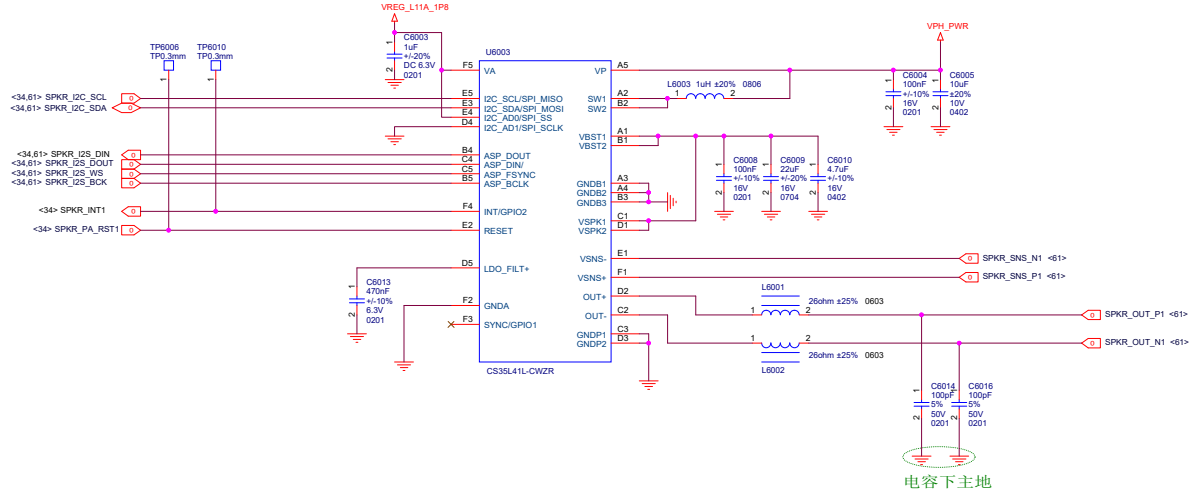

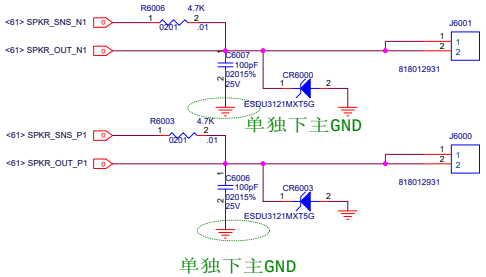

Title	J17 MAIN	
Size A2	Document Number Reserved(for AUDIO)	Rev P0
Date: Tuesday, August 25, 2020	Sheet	

INFARED

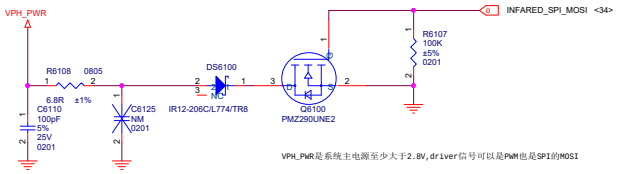

A+G

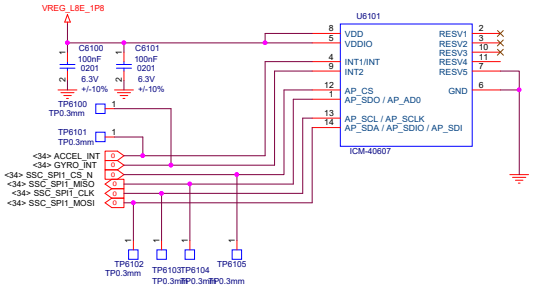

Fingerprint

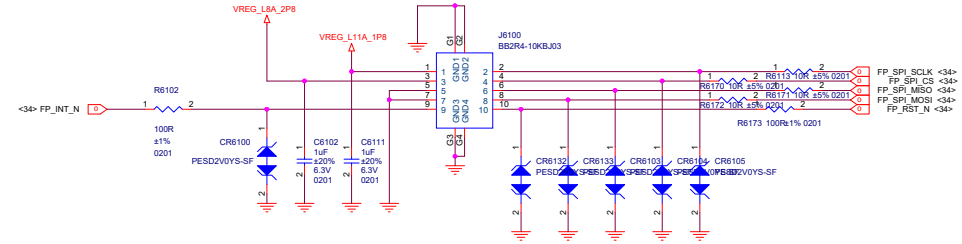

Sidekey

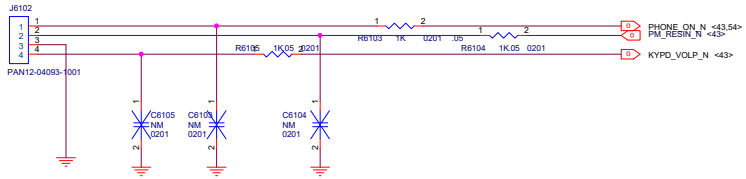

P/L-sensor

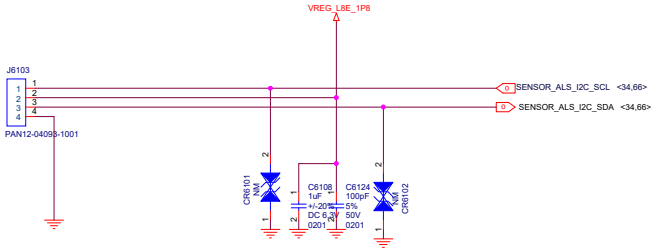

Title	J17 MAIN	
Size A2	Document Number SENSOR	Rev P0
Date: Tuesday, August 25, 2020	Sheet	

COMPASS

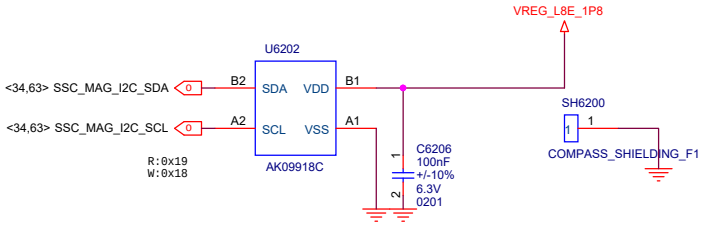

FLASH LED

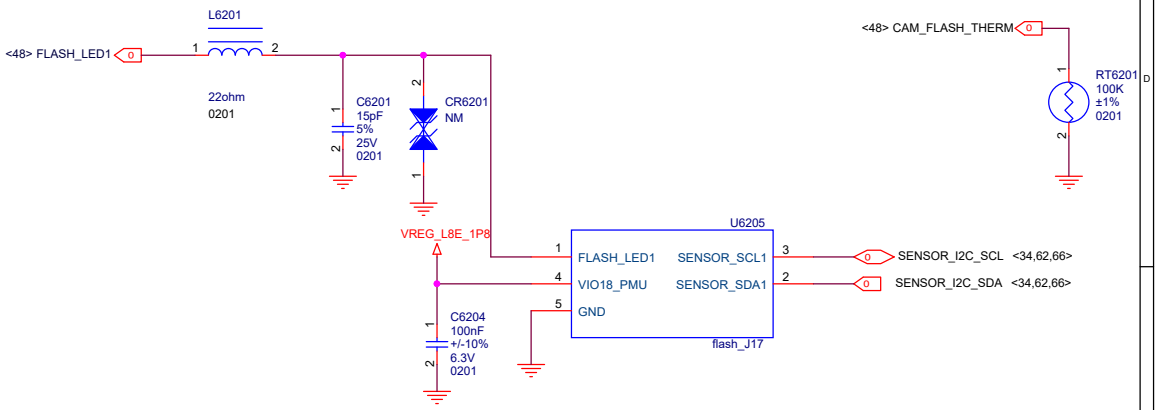

LED

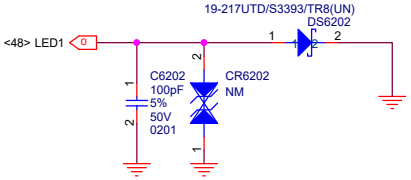

Title	J17 MAIN	
Size A3	Document Number SENSOR-2	Rev P0
Date: Tuesday, August 25, 2020	Sheet 63 74	

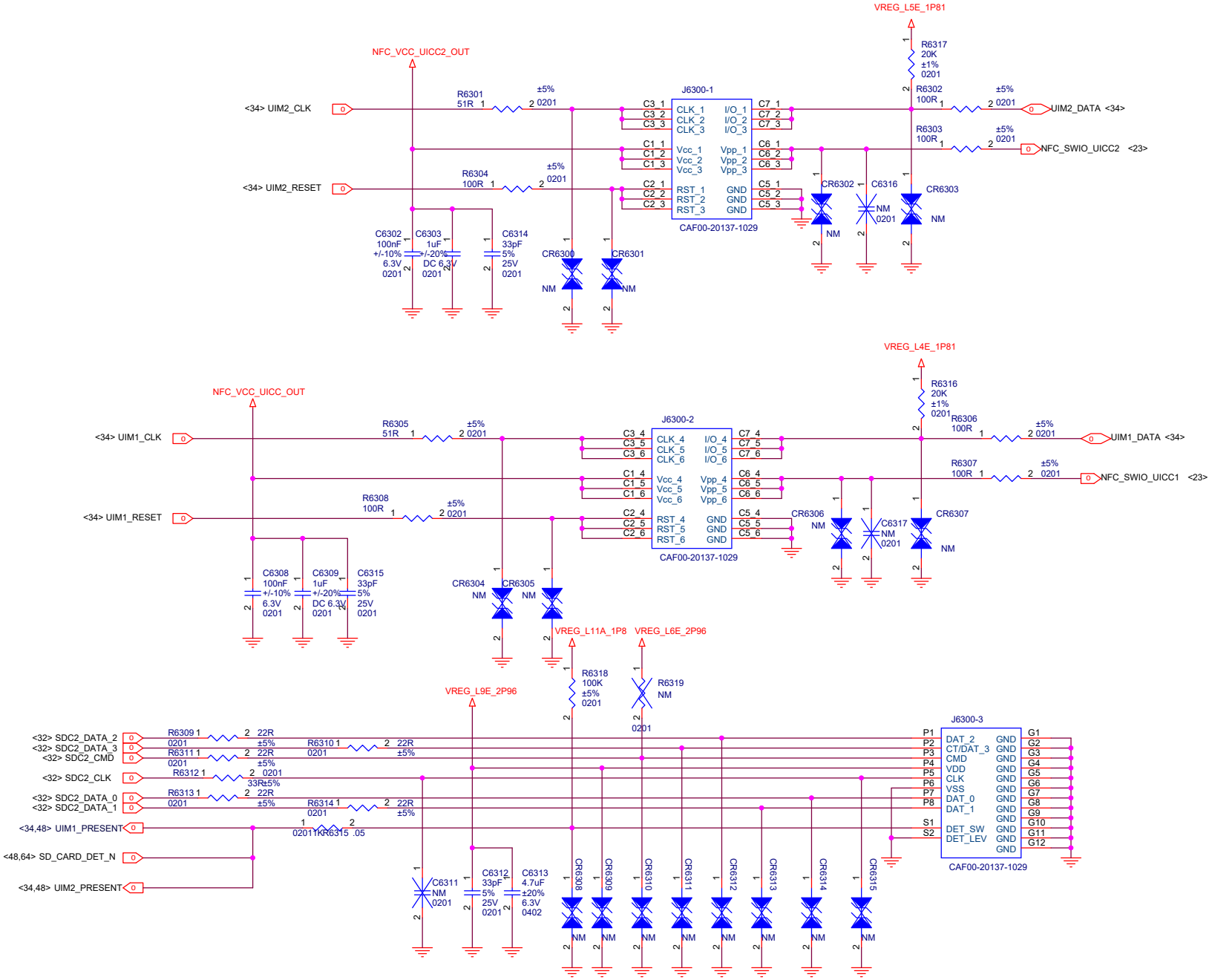

SIM CONNECTOR

Title	J17 MAIN	
Size A3	Document Number SIM	Rev P0
Date: Tuesday, August 25, 2020	Sheet 64	74

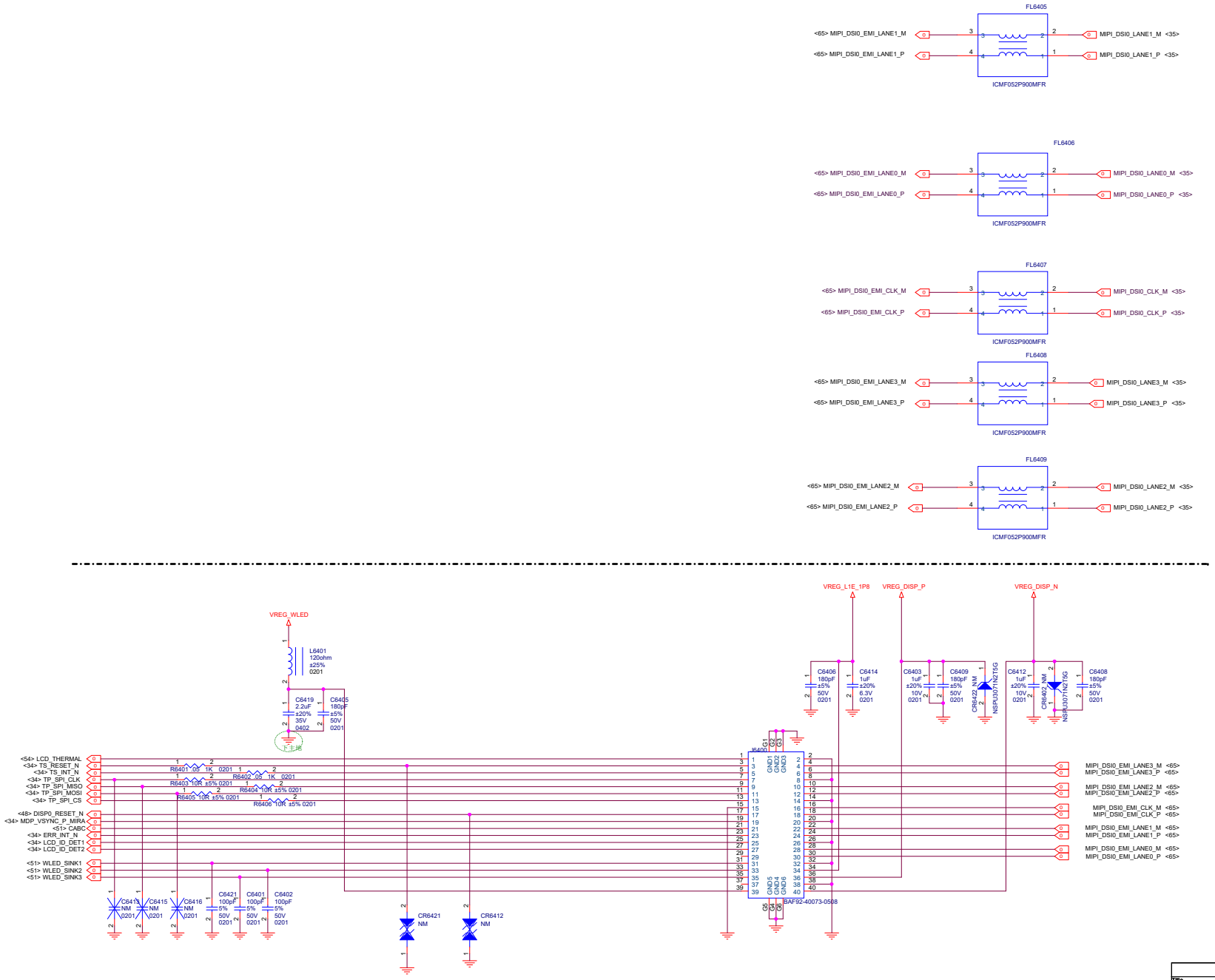

Title	J17 MAIN	
Size A2	Document Number AMOLED	Rev P0
Date: Tuesday, August 25, 2020	Sheet	

BTB CONNECTOR

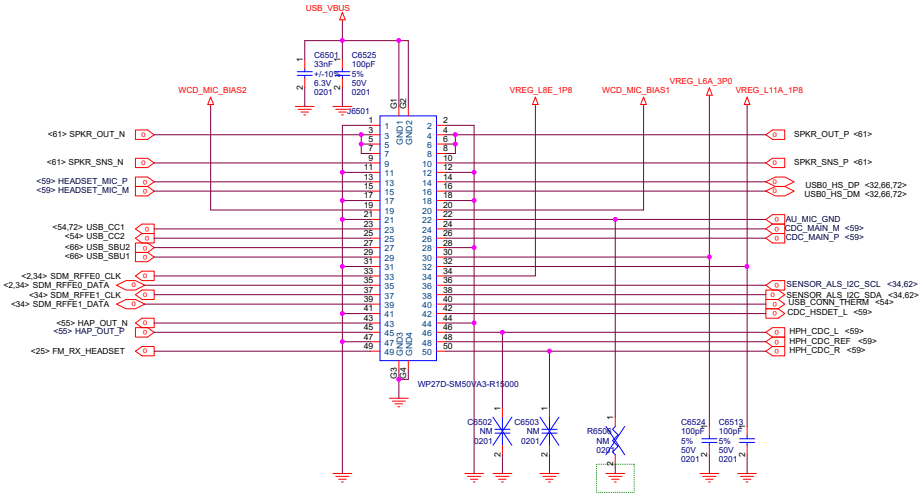

干净地方单独下主GND

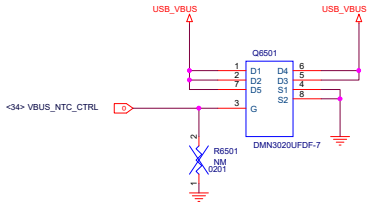

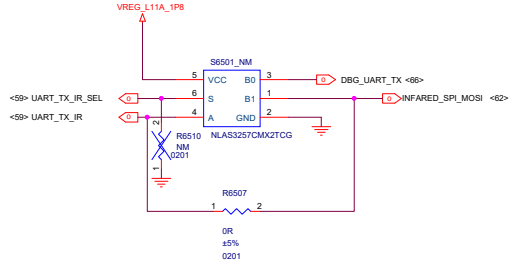

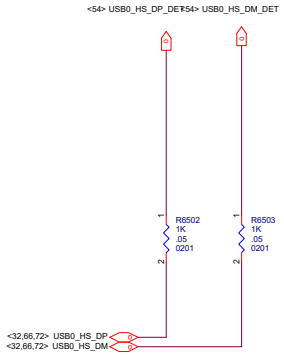

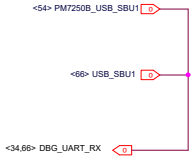

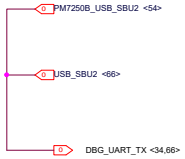

UART_LOG/LPD

UART测试点放到笼子外

UART SWITCH

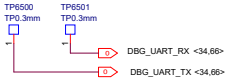

Title	J17 MAIN	
Size A2	Document Number BTB	Rev P0
Date: Tuesday, August 25, 2020	Sheet	

2M MACRO

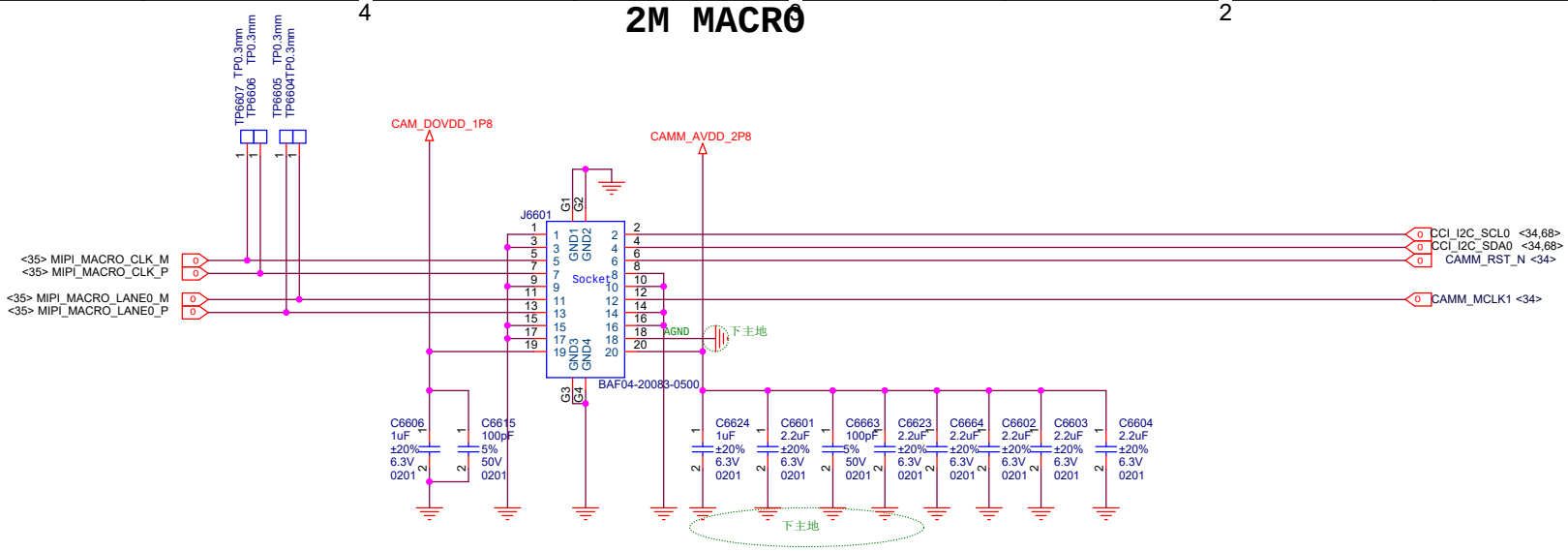

2M DEPTH

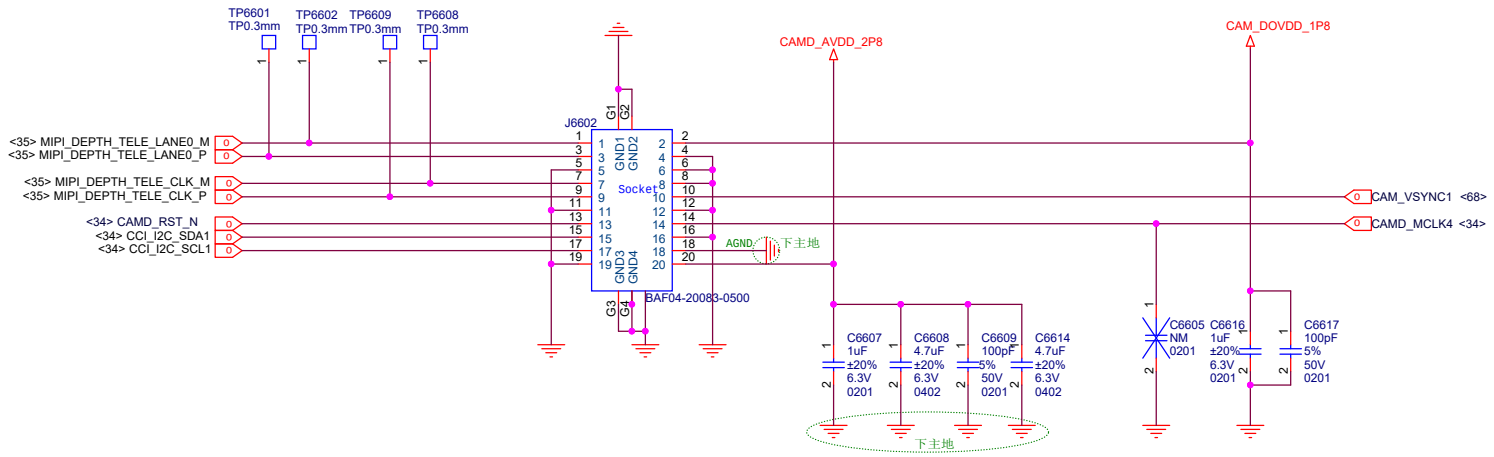

Title	J17 MAIN	
Size A3	Document Number <Doc>	Rev P0
Date: Tuesday, August 25, 2020	Sheet	

WIDE 64M

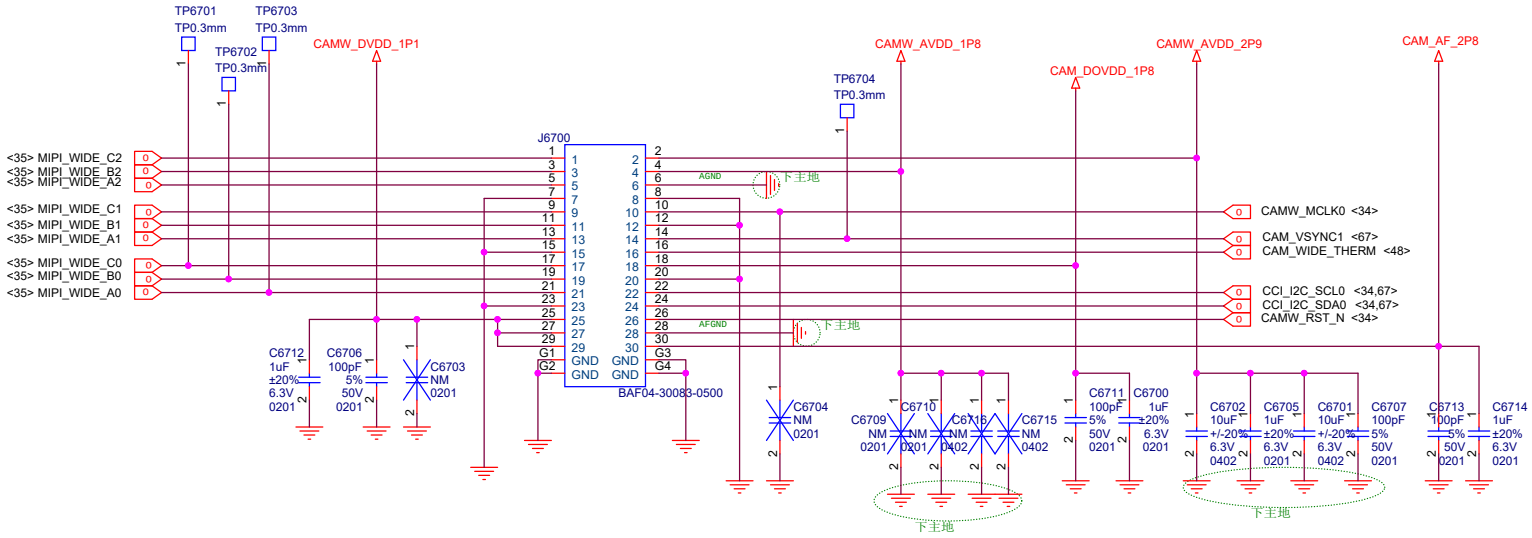

Title	J17 MAIN	
Size A3	Document Number WIDE&TELE CAMERA	Rev P0
Date: Tuesday, August 25, 2020	Sheet 68	74

16M FRONT

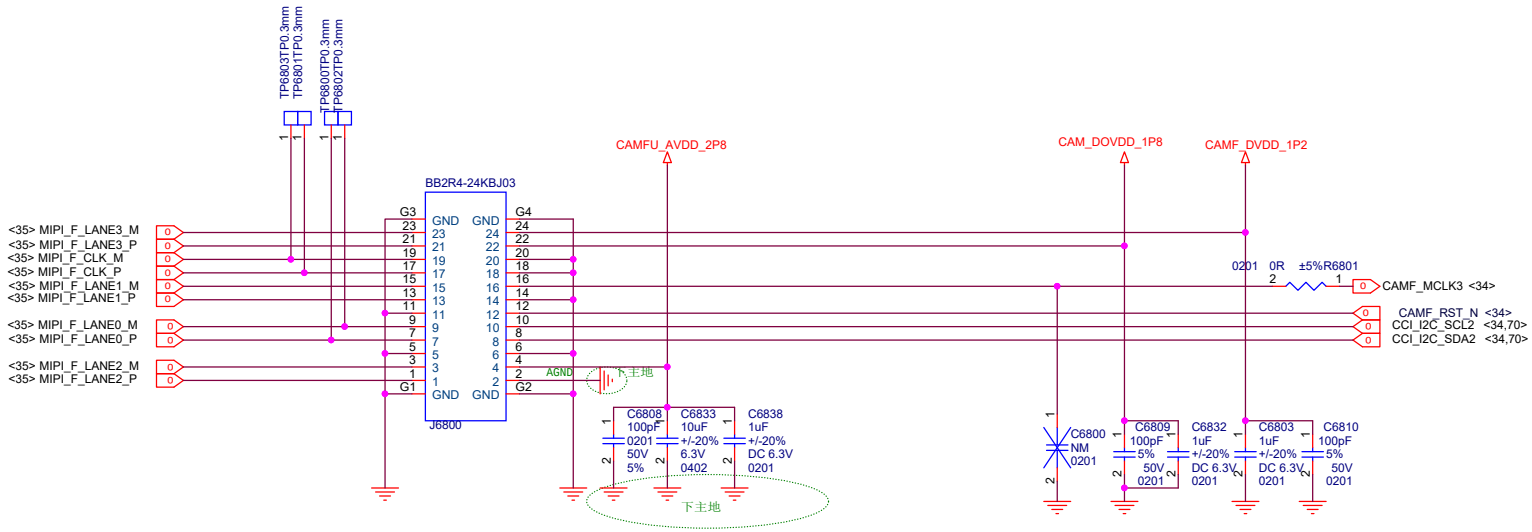

Title	J17 MAIN	
Size A3	Document Number Reserved(for Analog FM)	Rev P0
Date: Tuesday, August 25, 2020	Sheet 69	74

13M ULTRA

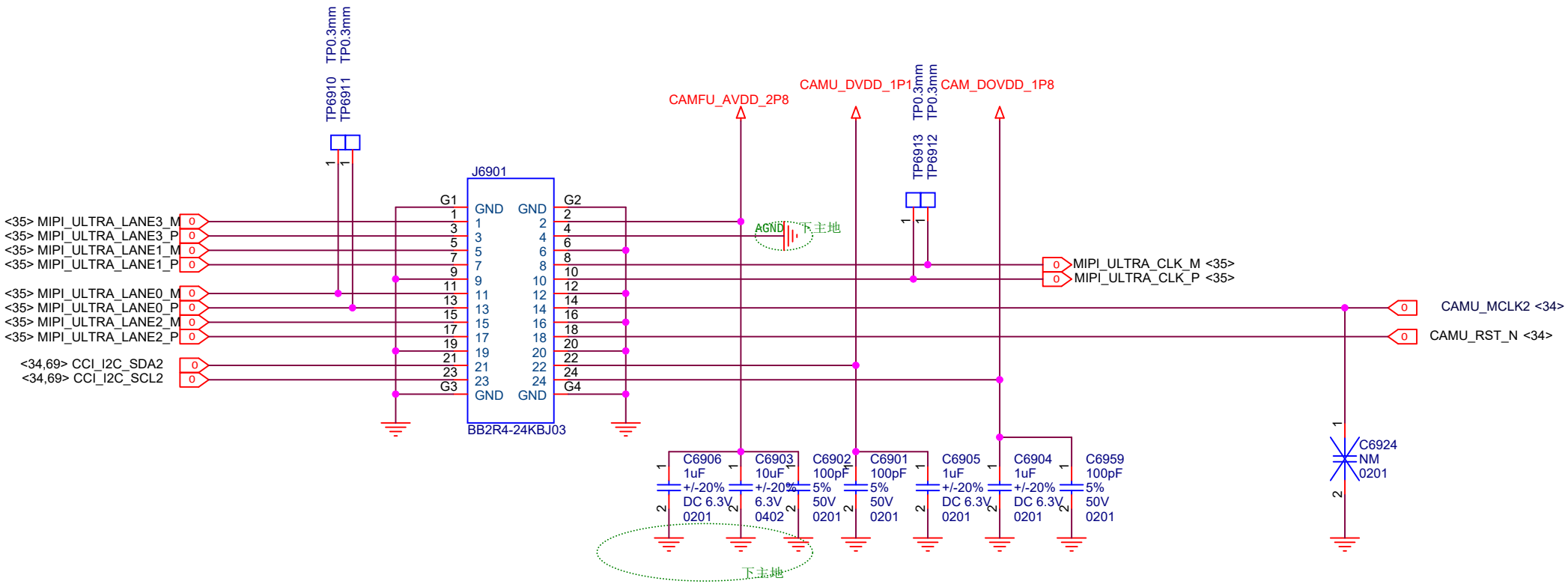

Title	J17 MAIN	
Size A4	Document Number ULTRA CAMERA	Rev P0
Date: Tuesday, August 25, 2020	Sheet 70	74

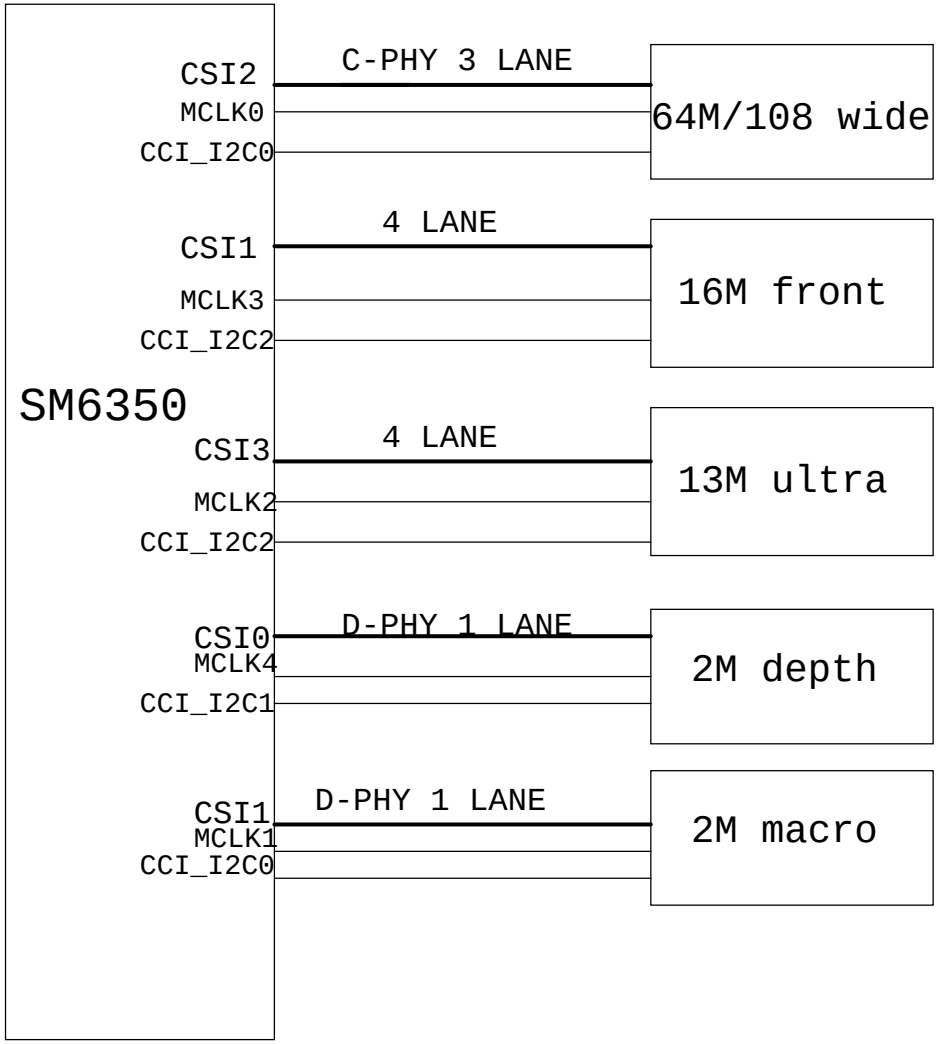

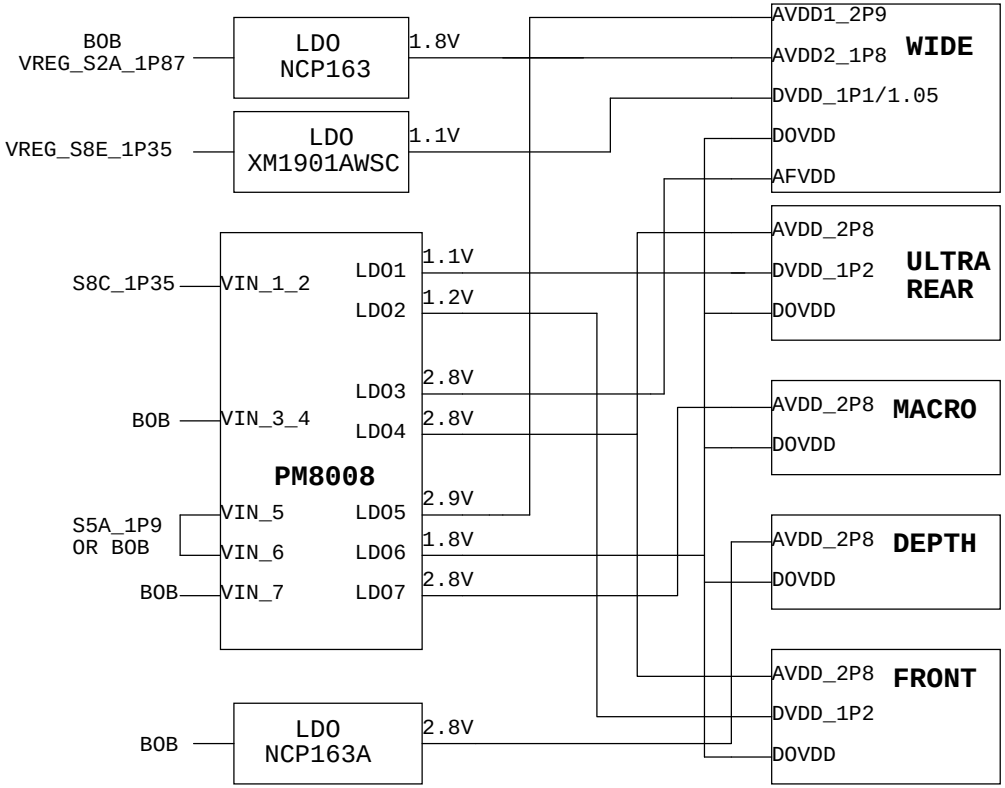

Title	J17 MAIN	
Size A3	Document Number CAMERA LDOs	Rev P0
Date: Tuesday, August 25, 2020	Sheet 71	

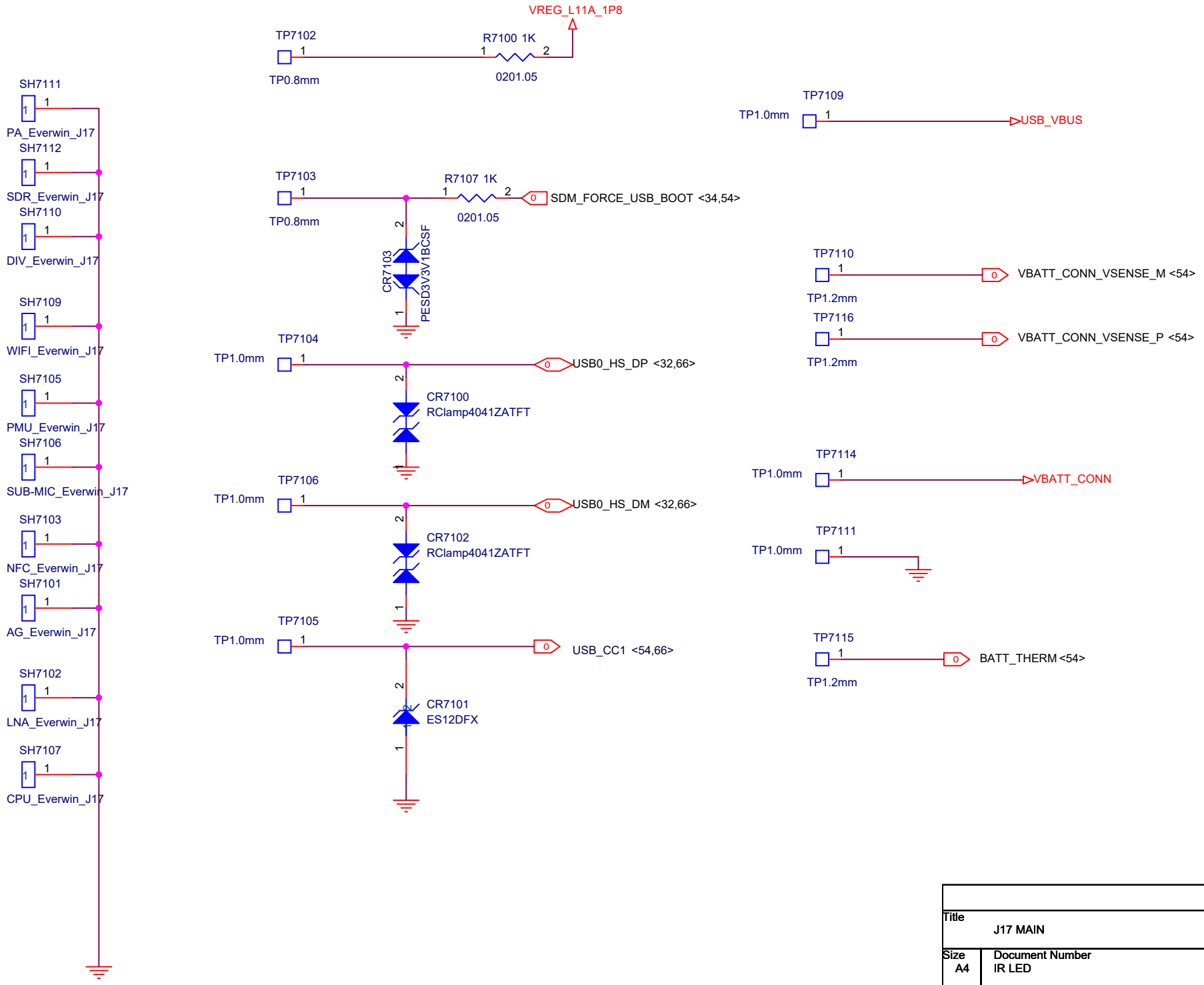

Title	J17 MAIN	
Size A4	Document Number IR LED	Rev P0
Date: Tuesday, August 25, 2020	Sheet 72	74

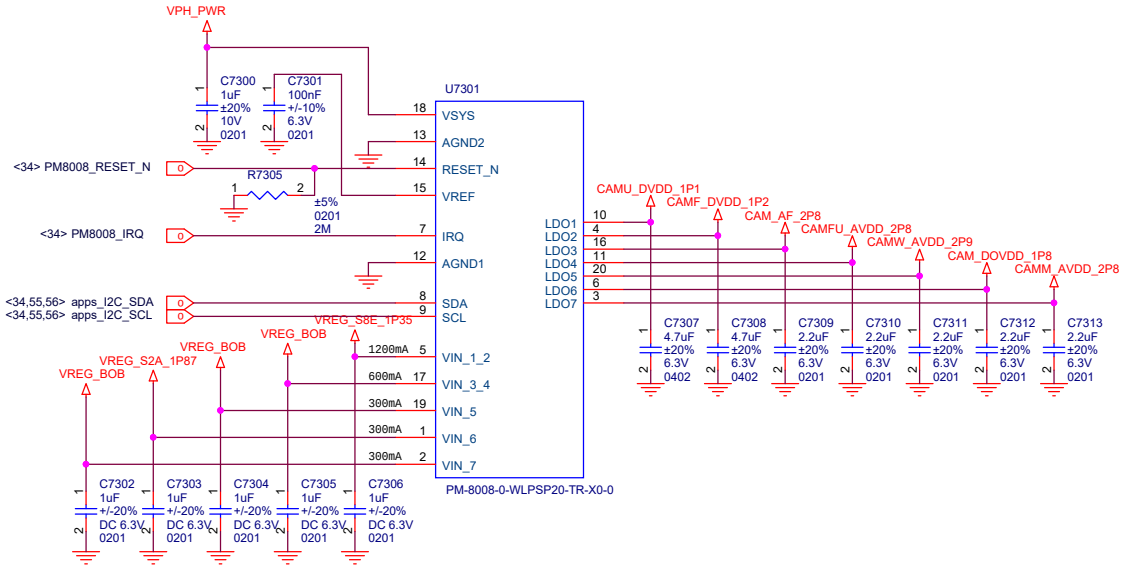

WIDE LDO

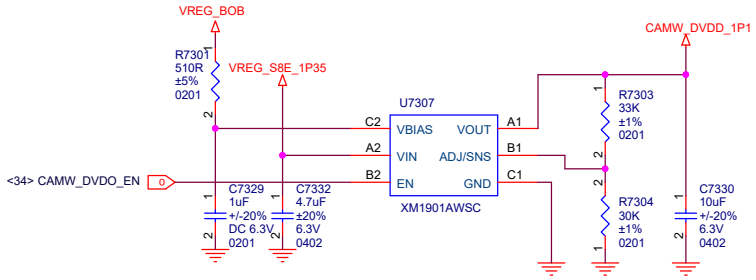

WIDE LDO

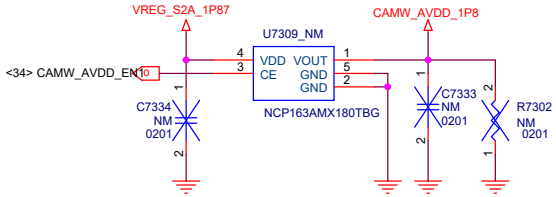

DEPTH LDO

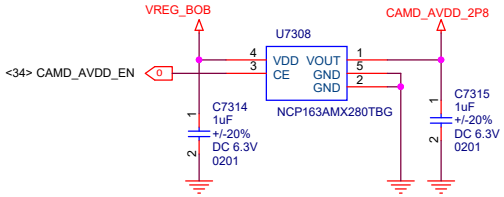

Title	J17 MAIN	
Size A3	Document Number CAMERA LDOs	Rev P0
Date: Tuesday, August 25, 2020	Sheet 73	

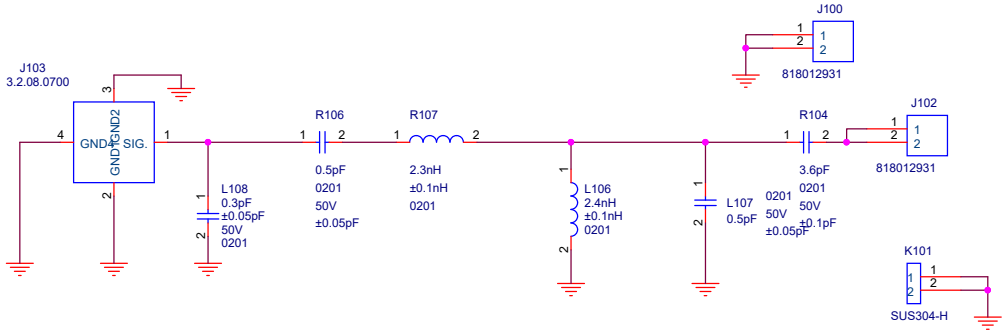

Title	J17 MAIN	
Size A3	Document Number CONTENT	Rev P0
Date: Tuesday, August 25, 2020	Sheet 74 of 74	